EXHAUST SHROUD

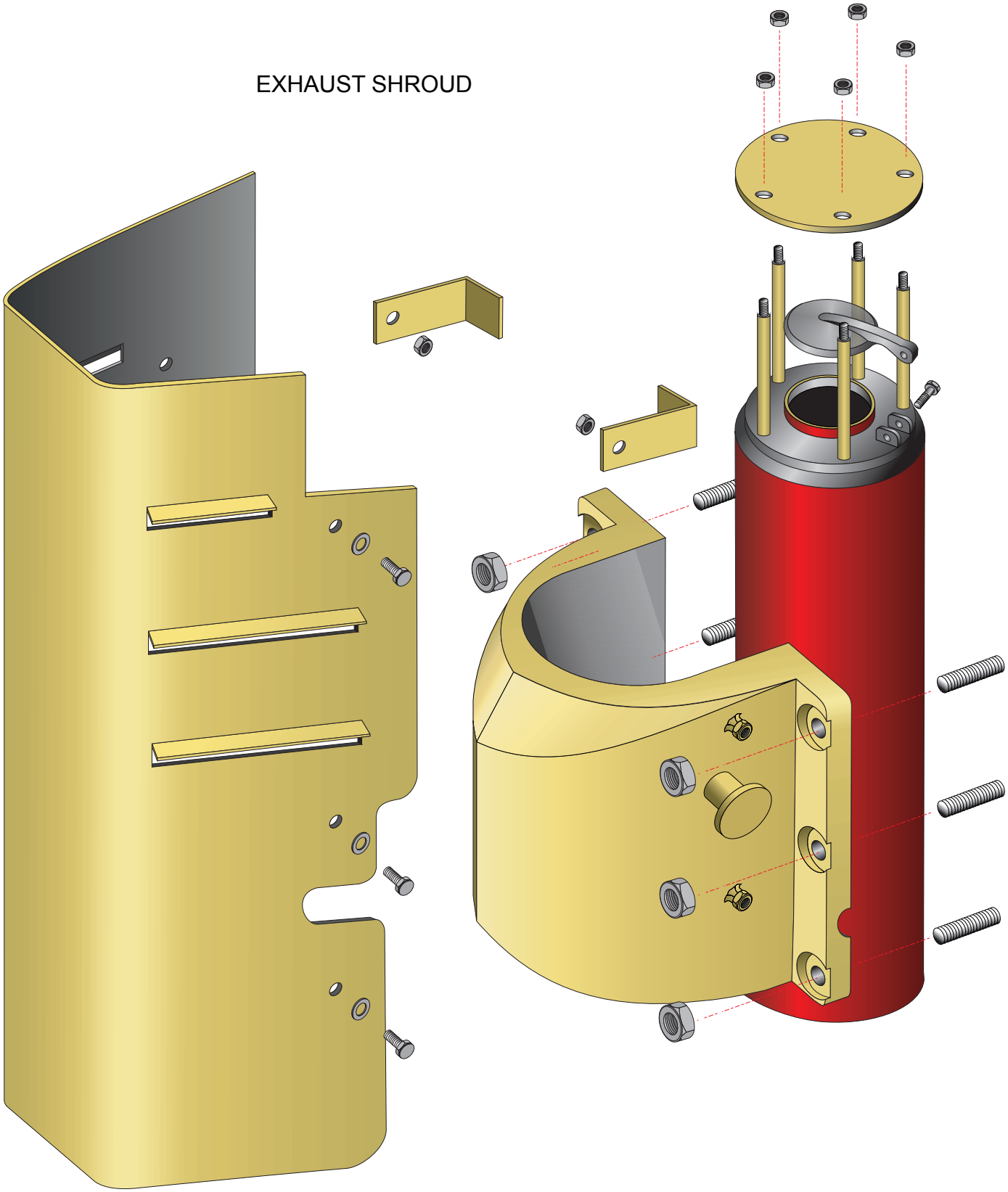

| | |
|---|---|
| DATE: | 9 FEB 2008 |
| DRAWN BY: | B. BALKWILL |
| REVIEWED: | |
| SIGNOFF: | 15 AUG 2015 |

| REV: | REVIEWED: | DATE: |
|---|---|---|
| 1 | T. VOGEL | MAY 2009 |
| 2 | B BALKWILL | OCT 2010 |
| 3 | B BALKWILL | NOV. 2011 |
| 3A | B. BALKWILL | NOV. 2011 |
| 4 | B BALKWILL | SEP 2014 |
| 5 | B BALKWILL | AUG. 2015 |

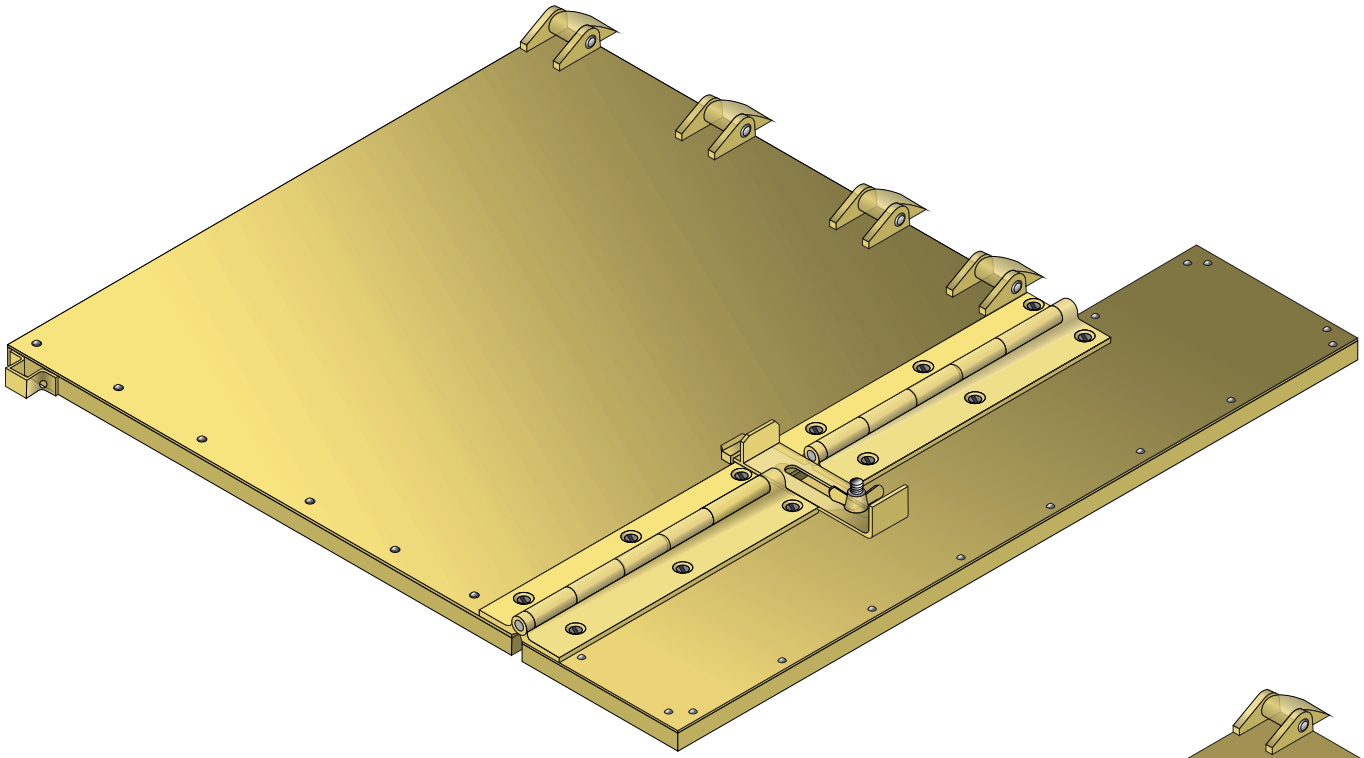

LHS HULL
FRONT MUDGUARD

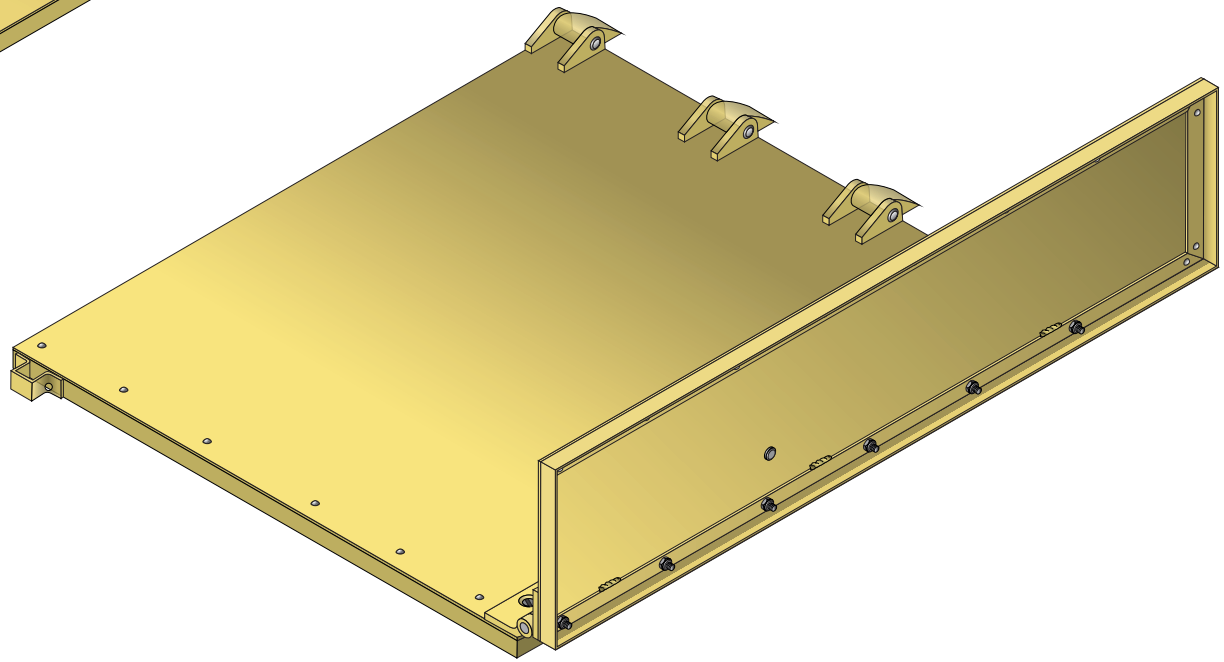

| | |
|---|---|
| DATE: | 9 FEB 2008 |
| DRAWN BY: | B BALKWILL |
| REVIEWED: | |
| SIGNOFF: | 21 JUN 2015 |

| REV: | REVIEWED: | DATE: |
|---|---|---|
| 1 | TAD VOGEL | NOV 2008 |
| 2 | L. LLOYD | NOV 2009 |
| 3 | B. BALKWILL | SEP 2014 |
| 4 | B BALKWILL | JUN. 2015 |
| | | |

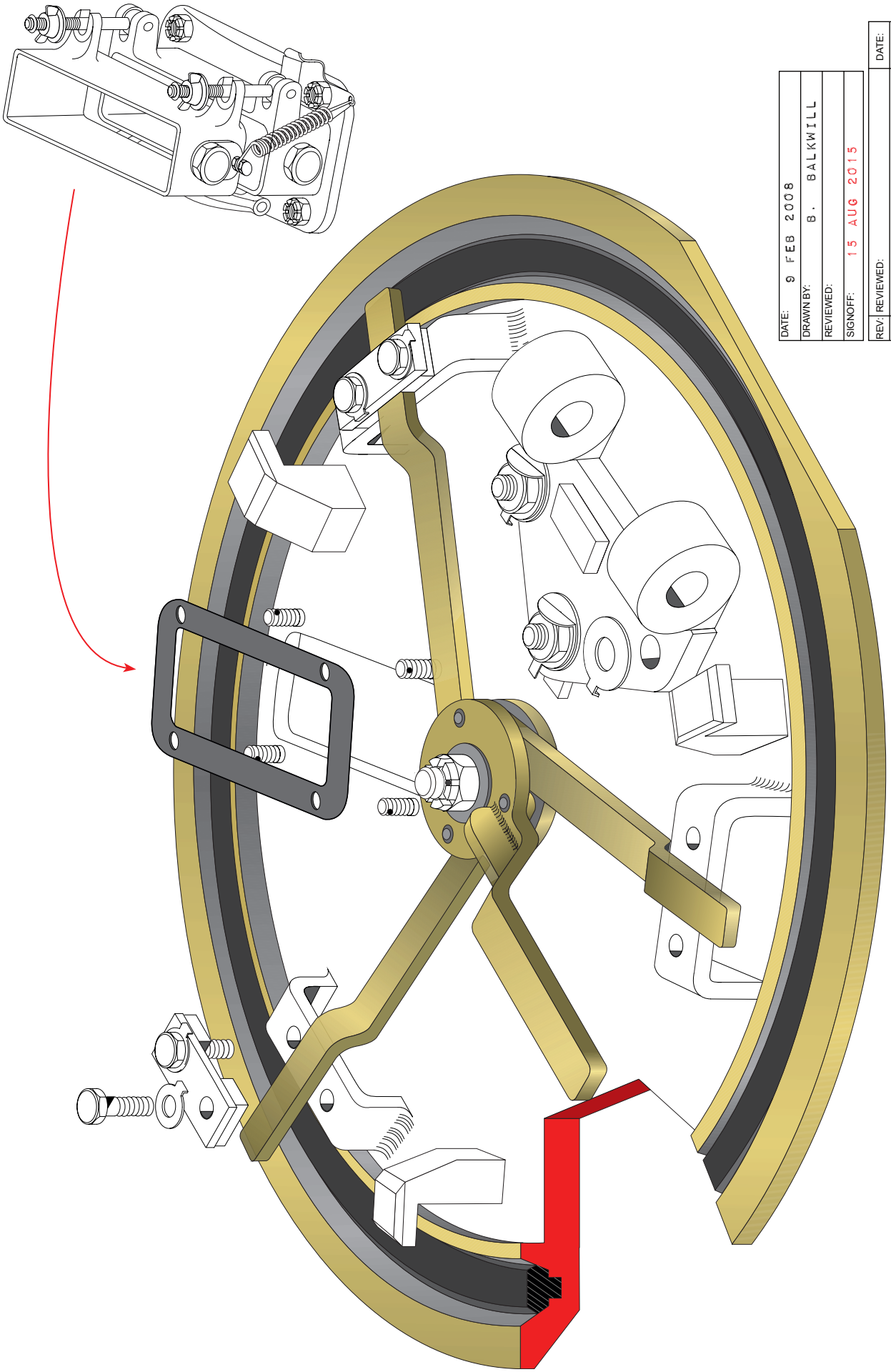
DATE: 9 FEB 2008
DRAWN BY: B. BALKWILL
REVIEWED:
SIGNOFF: 15 AUG 2015
REV: REVIEWED: DATE:
1 TAD VOGEL NOV 2008
2 L. LLOYD MAY 2009
3 B BALKWILL OCT 2010
4 B.BALKWILL NOV 2011
5 L. LLOYD SEP 2014
6 B BALKWILL AUG 2015
RADIO OPERATORS HATCH

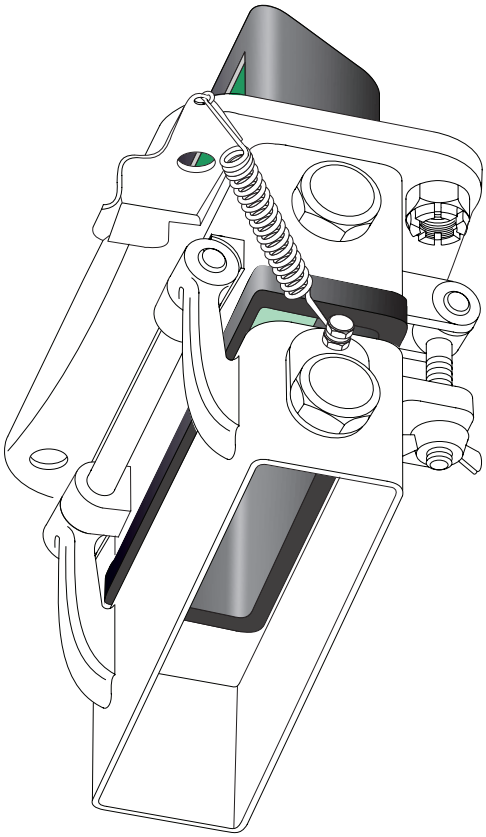

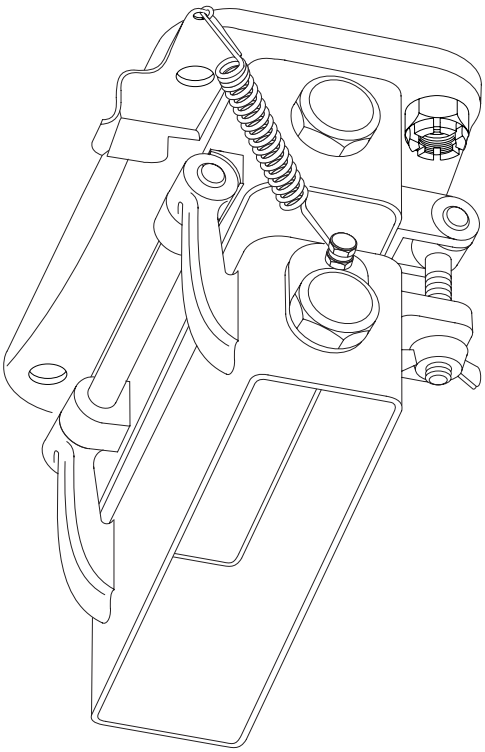

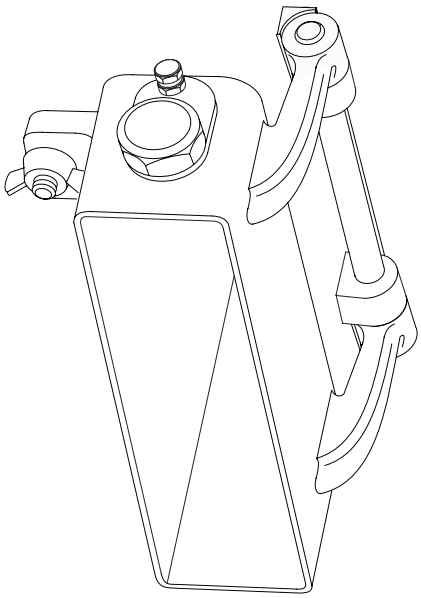

VISION BLOCKS

| | |
|---|---|
| DATE: | 9 FEB 2008 |
| DRAWN BY: | B. BALKWILL |
| REVIEWED: | |
| SIGNOFF: | 16 AUG 2015 |

| REV: | REVIEWED: | DATE: |
|---|---|---|
| 1 | T. VOGEL | MAY 2009 |
| 2 | L.LLOYD | OCT. 2010 |
| 3 | L.LLOYD | NOV 2010 |
| 4 | B BALKWILL | SEP 2014 |
| 5 | L LLOYD | OCT. 2014 |
| 6 | B BALKWILL | AUG 2015 |

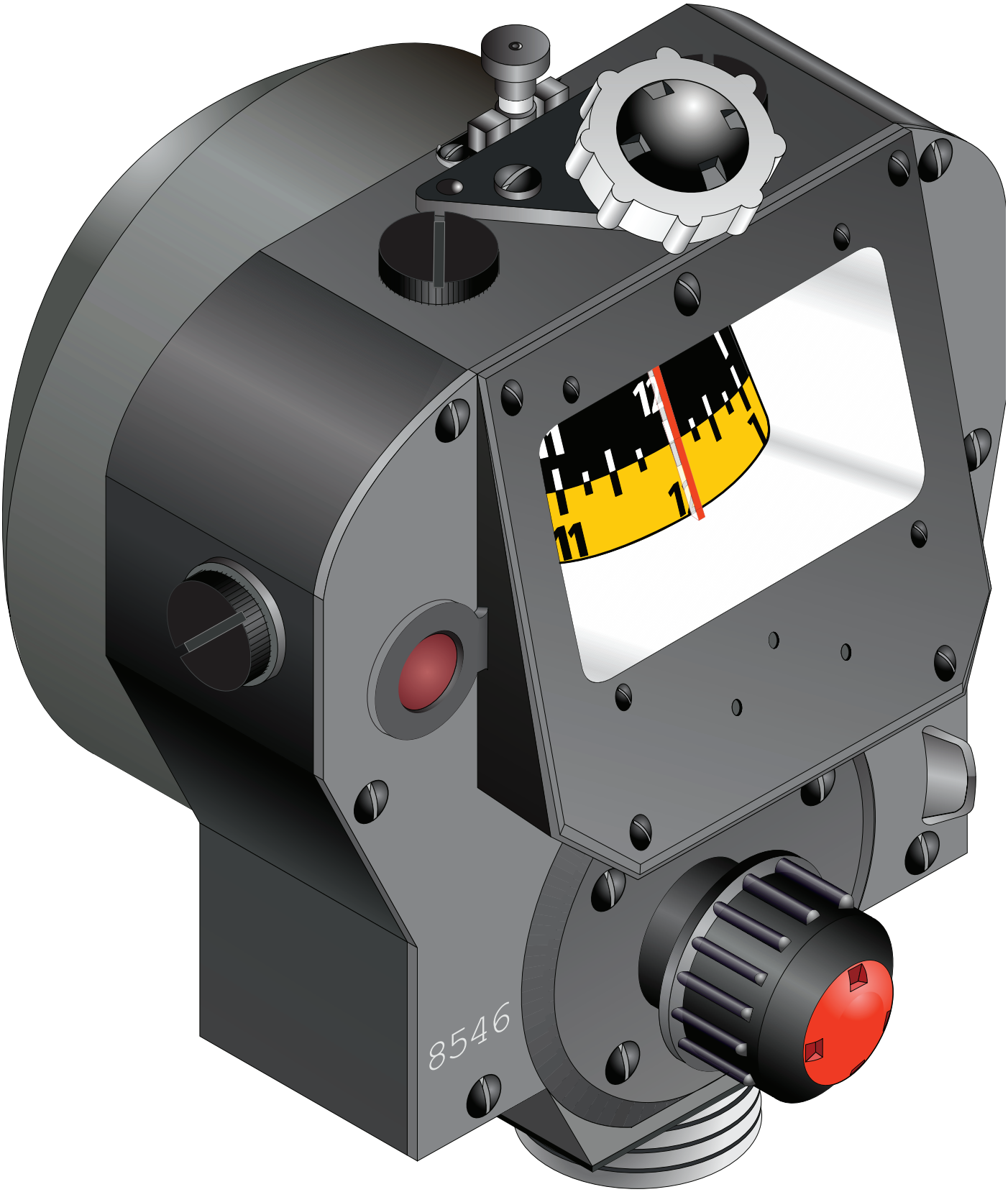


DIRECTIONAL
GYROSCOPE

| | |
|---|---|
| DATE: | 11 NOV 2008 |
| DRAWN BY: | B. BALKWILL |
| REVIEWED: | |
| SIGNOFF: | 20 SEP 2014 |

| REV: | REVIEWED: | DATE: |
|---|---|---|
| 1 | B. BALKWILL | NOV 2008 |
| 2 | L LLOYD | |
| 2A | B BALKWILL | SEPT. 2014 |
| | | |
| | | |

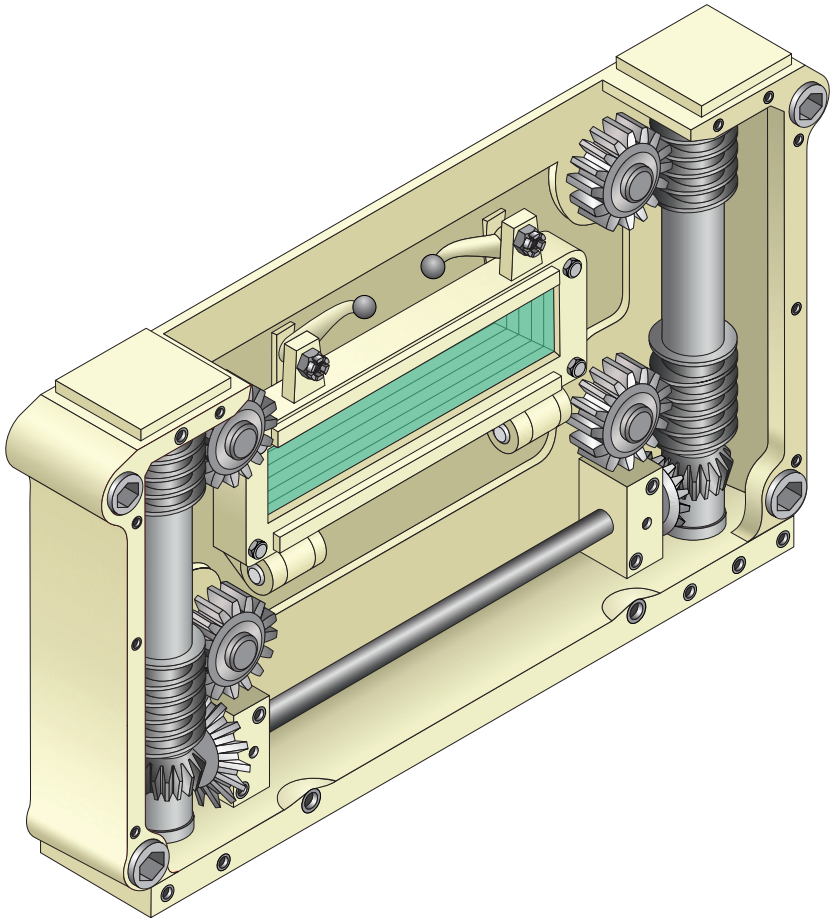

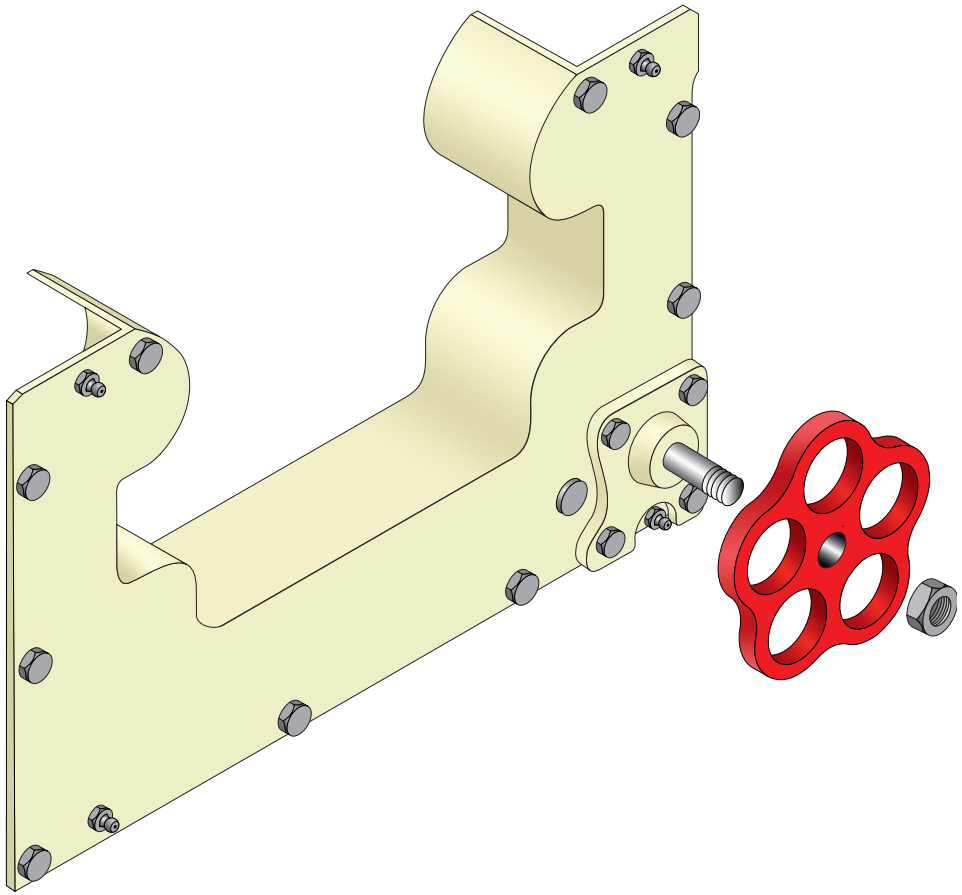

DRIVERS VISION PORT

| | |
|---|---|
| DATE: | 9 FEB 2008 |
| DRAWN BY: | B BALKWILL |
| REVIEWED: | |
| SIGNOFF: | 27 SEP 2014 |

| REV: | REVIEWED: | DATE: |
|---|---|---|
| 1 | TAD VOGEL | NOV 2008 |
| 2 | L. LLOYD. | MAY 2009 |
| 3 | L. LLOYD | AUG 2010 |
| 4 | B BALKWILL | OCT 2010 |
| 5 | B BALKWILL | SEP 2014 |

FUEL TANKS

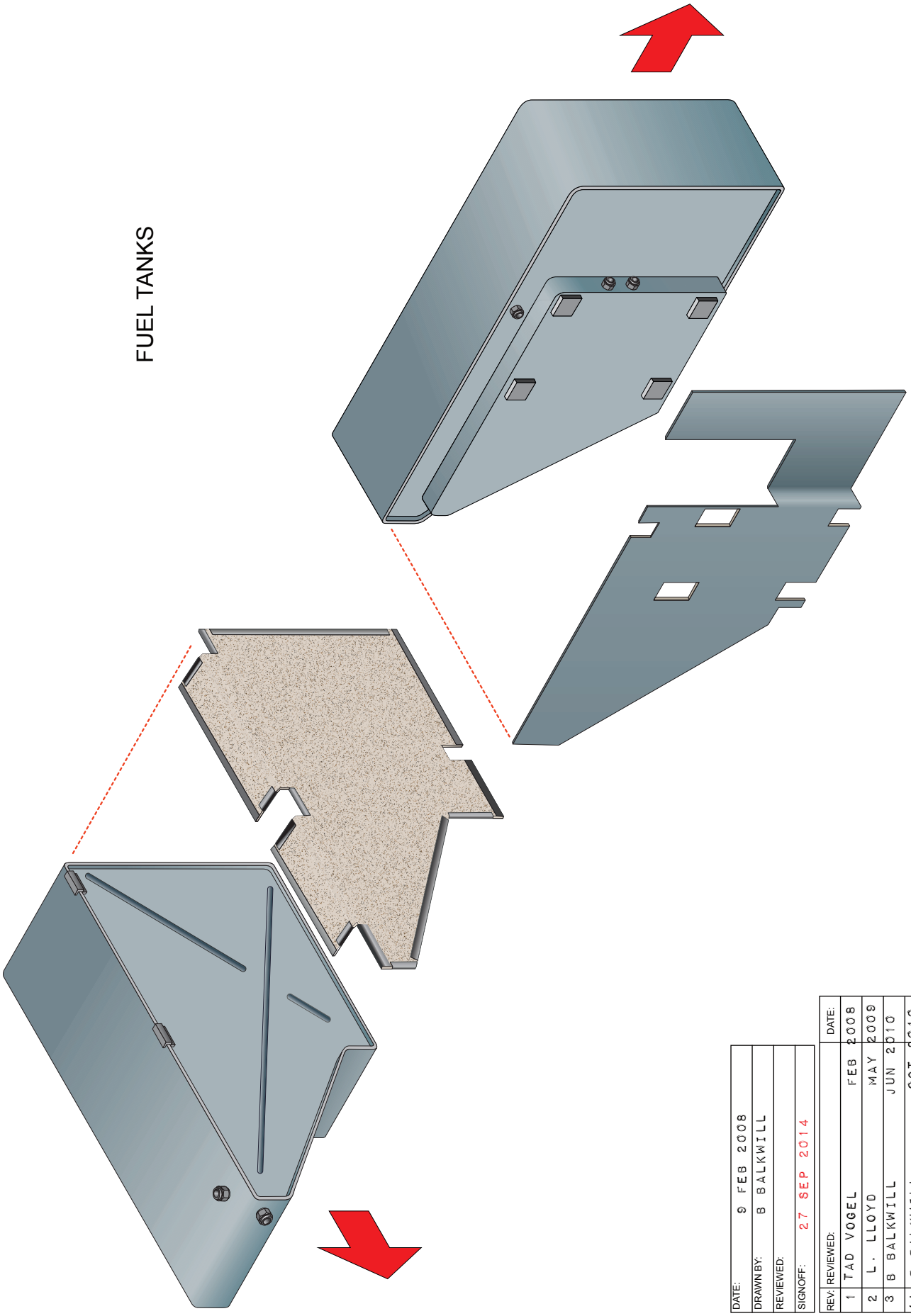

| | |
|---|---|
| DATE: | 9 FEB 2008 |
| DRAWN BY: | B BALKWILL |
| REVIEWED: | |
| SIGNOFF: | 27 SEP 2014 |

| REV: | REVIEWED: | DATE: |
|---|---|---|
| 1 | TAD VOGEL | FEB 2008 |
| 2 | L. LLOYD | MAY 2009 |
| 3 | B BALKWILL | JUN 2010 |
| 4A | B.BALKWILL | OCT 2010 |
| 4B | B.BALKWILL | OCT 2010 |
| 4C | B BALKWILL | OCT 2010 |
| 5 | B BALKWILL | SEP 2014 |

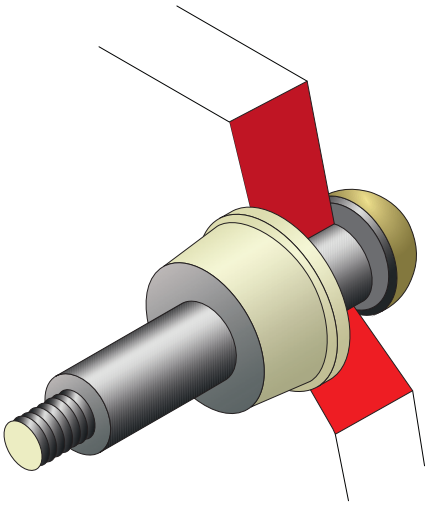

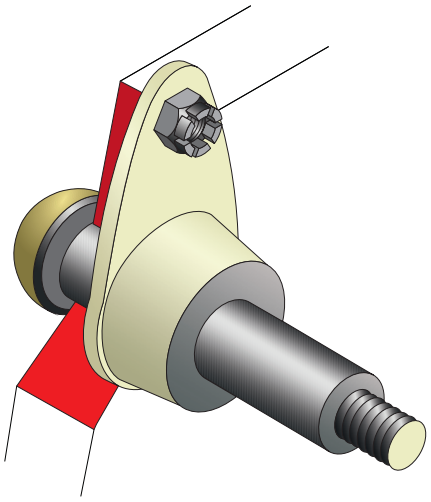

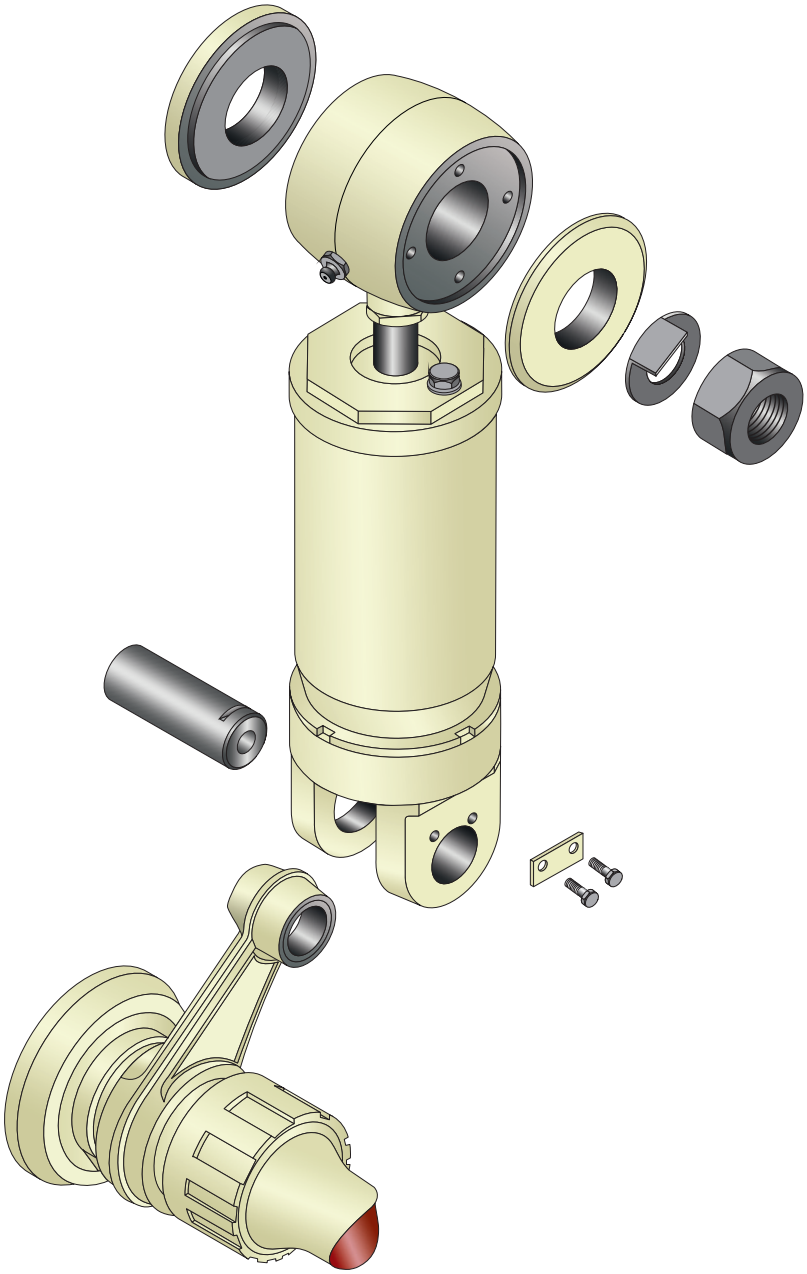

SHOCK ABSORBER

| | |
|---|---|
| DATE: | 09 FEB 2009 |
| DRAWN BY: | BR BALKWILL |
| REVIEWED: | |
| SIGNOFF: | 30 JUN 2015 |

| REV: | REVIEWED: | DATE: |
|---|---|---|
| 1 | T VOGEL | NOV 2009 |
| 2 | BR BALKWILL | MAY 2010 |
| 3 | BR. BALKWILL | NOV 2010 |
| 4 | BR BALKWILL | SEP 2014 |
| 5 | L LLOYD | SEP 2014 |
| 6 | BR BALKWILL | JUN 2015 |

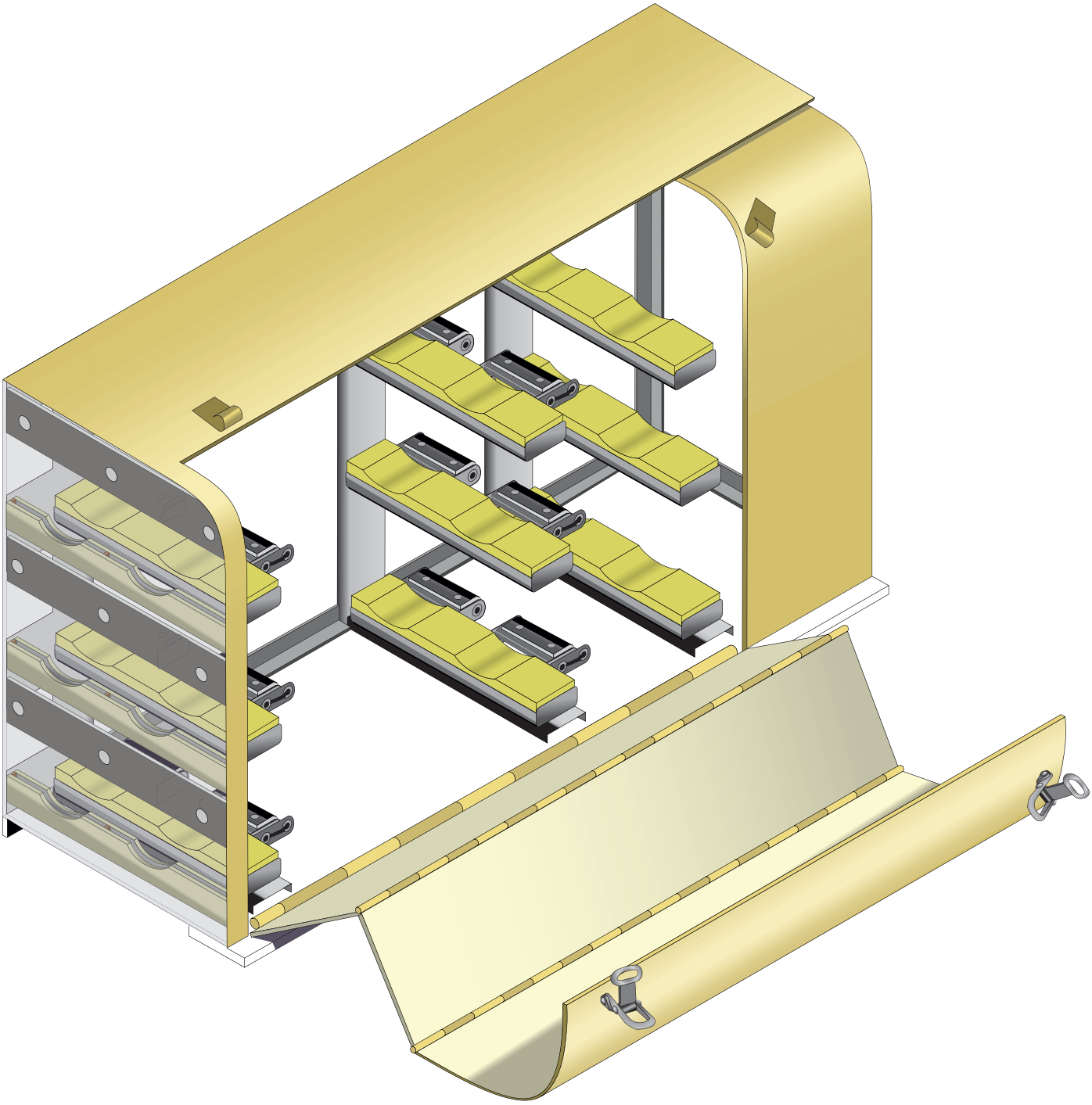

DRIVERS COMPARTMENT
AMMUNITION PANNIER

| | |
|---|---|
| DATE: | 09 FEB 2009. |
| DRAWN BY: | B. BALKWILL |
| REVIEWED: | |
| SIGNOFF: | 20 SEP 2014 |

| REV: | REVIEWED: | DATE: |
|---|---|---|
| 1 | T VOGEL. FEB. 2009. | |
| 2 | L LLOYD JUNE 2010 | |
| 2A | B. BALKWILL NOV. 2010 | |
| 2B | B BALKWILL NOV. 2010 | |
| 2C | B BALKWILL DEC 2010 | |

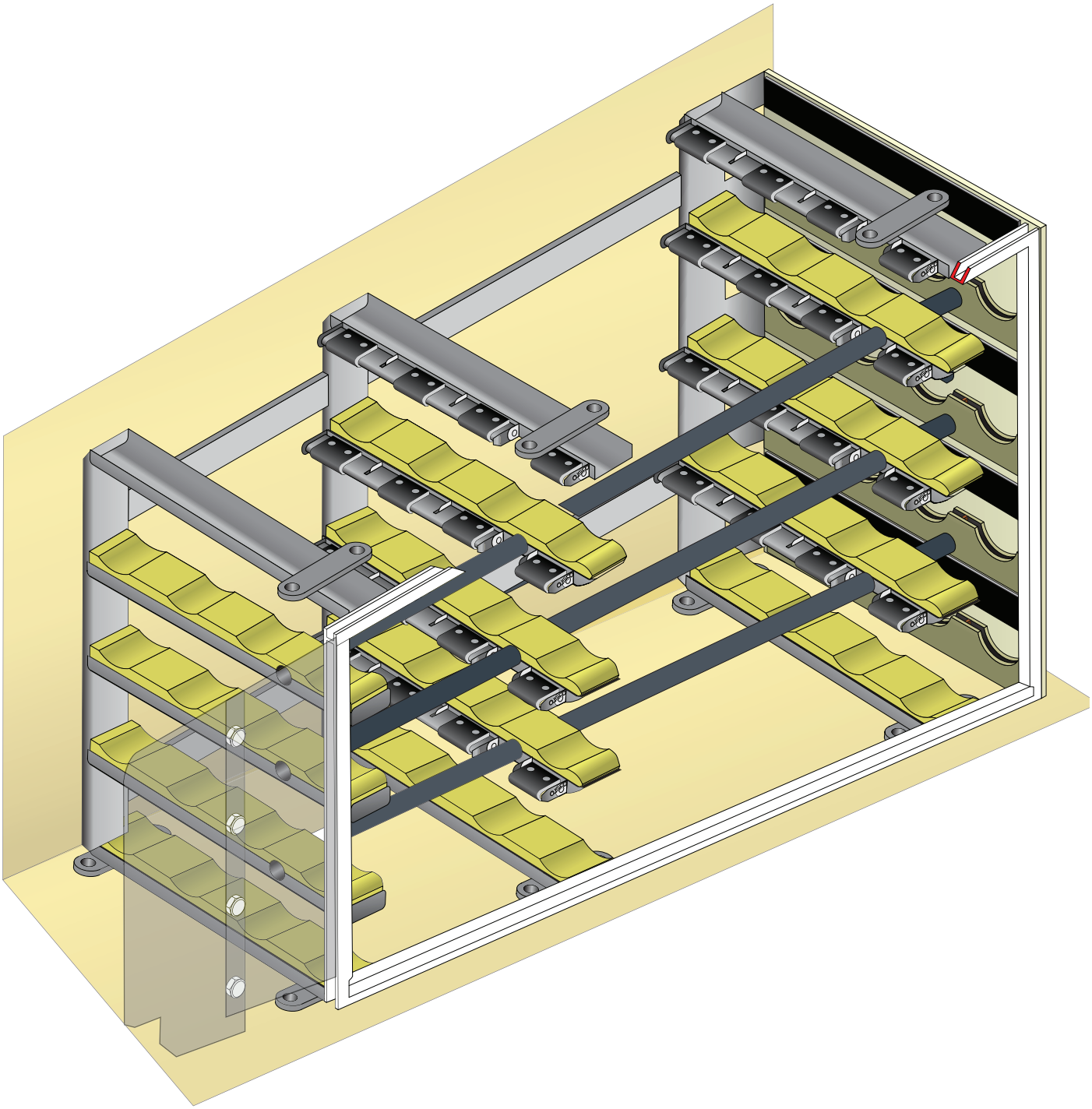

RHS HULL
AMMUNITION PANNIER

| | |
|---|---|
| DATE: | 09 FEB 2009. |
| DRAWN BY: | B. BALKWILL |
| REVIEWED: | |
| SIGNOFF: | 21 SEP 2014 |

| REV: | REVIEWED: | | DATE: |
|---|---|---|---|
| 1 | T VOGEL. | MAY | 2009. |
| 2 | L LLOYD | JUNE | 2010 |
| | | | |
| 4B | B BALKWILL | NOV. | 2010 |
| 4C | B BALKWILL | NOV. | 2010 |

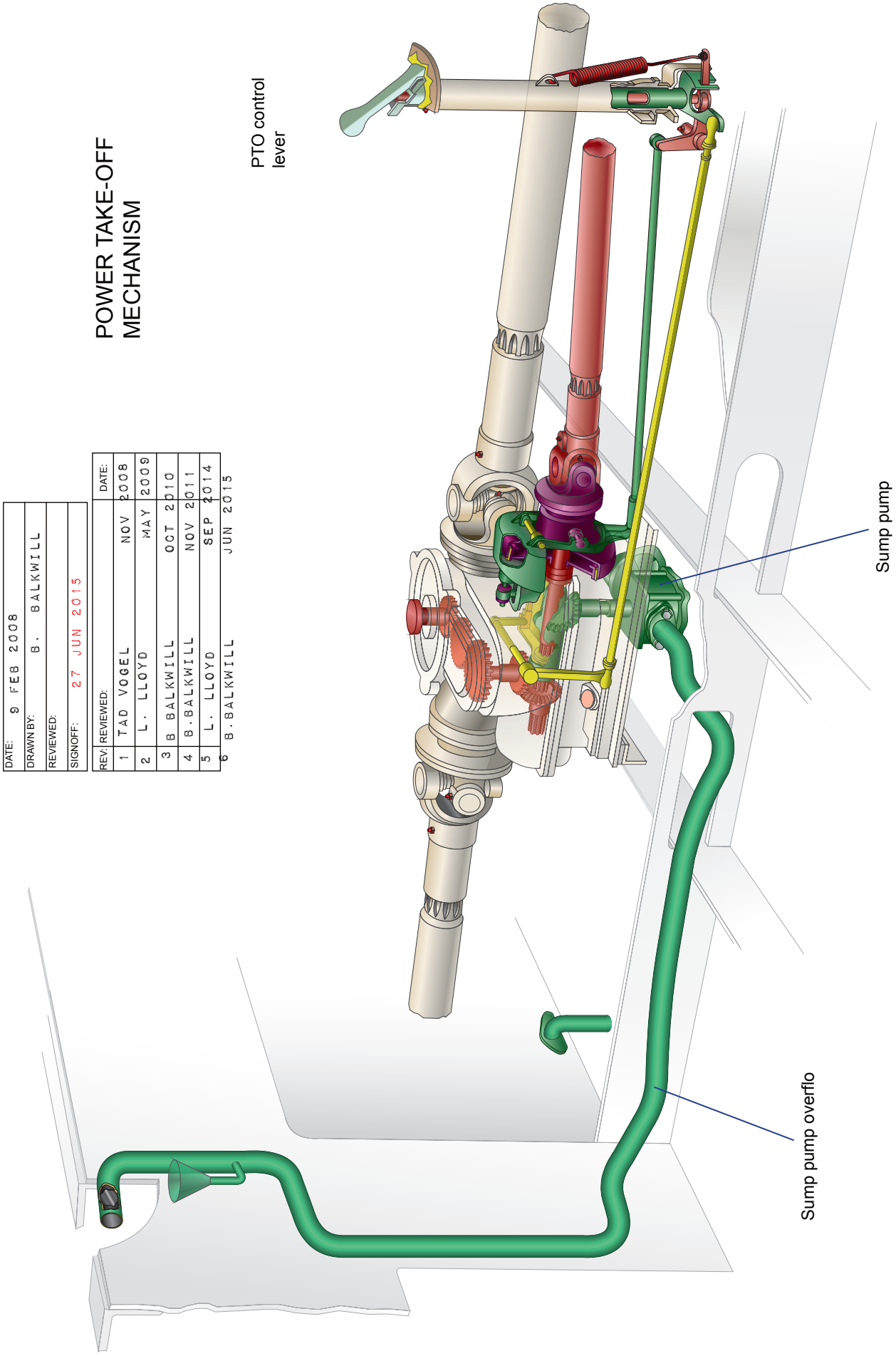


© The Tank Museum, Bovington, UK.

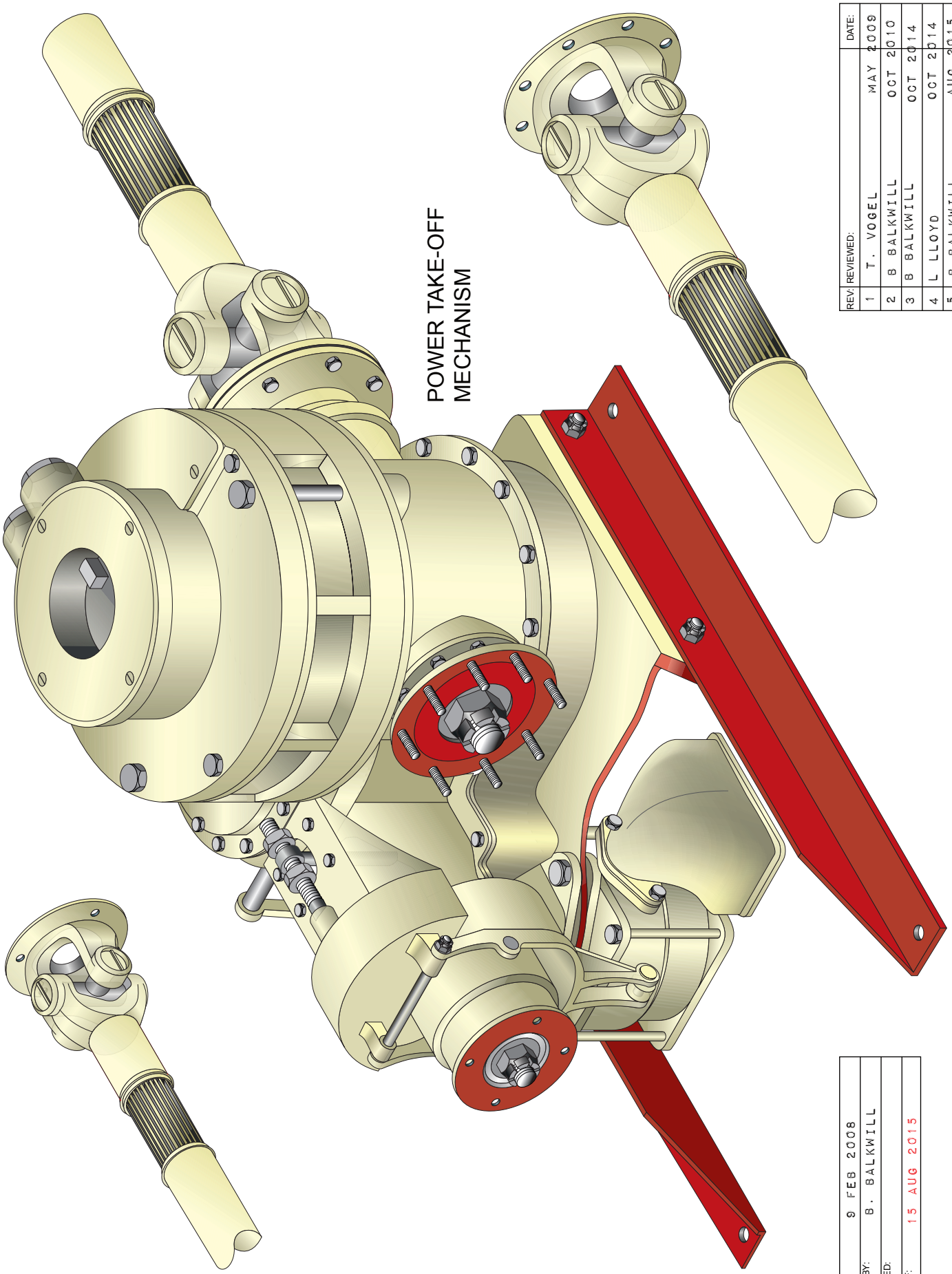
POWER TAKE-OFF
MECHANISM
REV. REVIEWED: DATE:
1 T. VOGEL MAY 2009
2 B BALKWILL OCT 2010
3 B BALKWILL OCT 2014
4 L LLOYD OCT 2014
5 B BALKWILL AUG 2015
DATE: 9 FEB 2008
DRAWN BY: B. BALKWILL
REVIEWED:
SIGNOFF: 15 AUG 2015

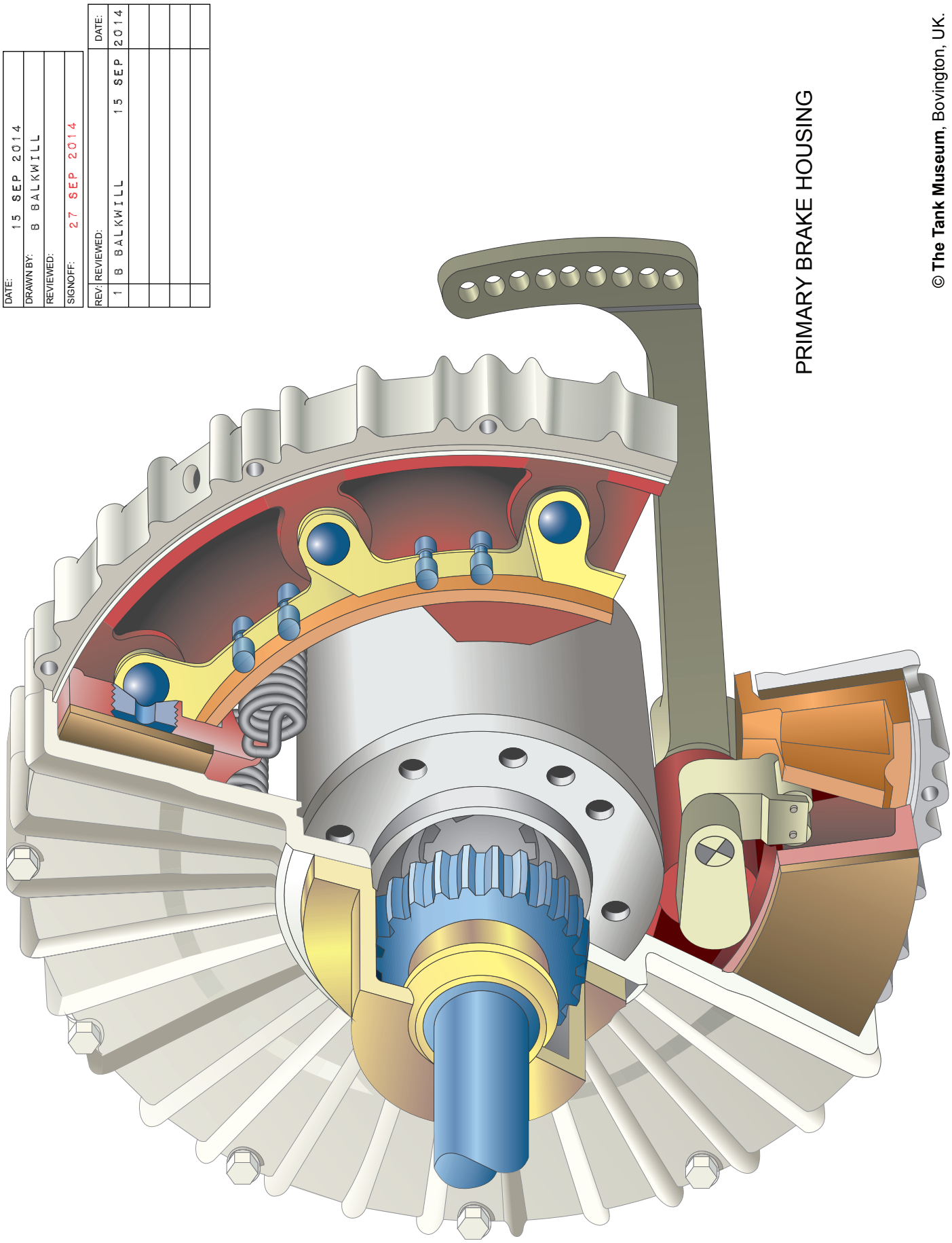


© **The Tank Museum**, Bovington, UK.

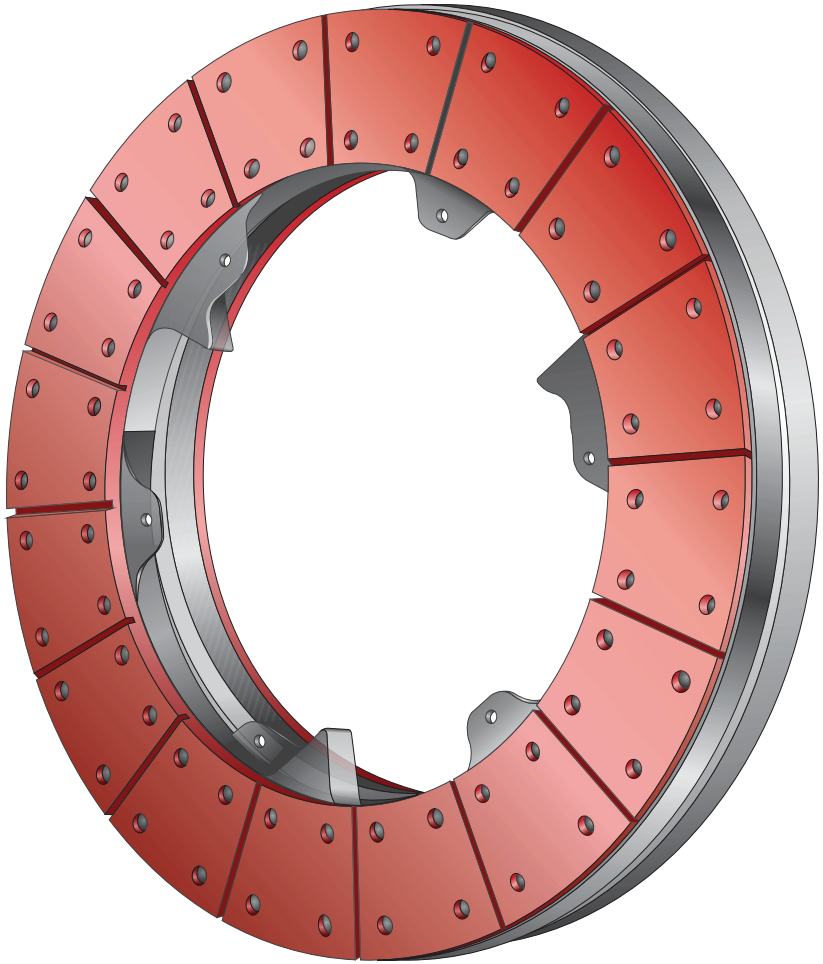

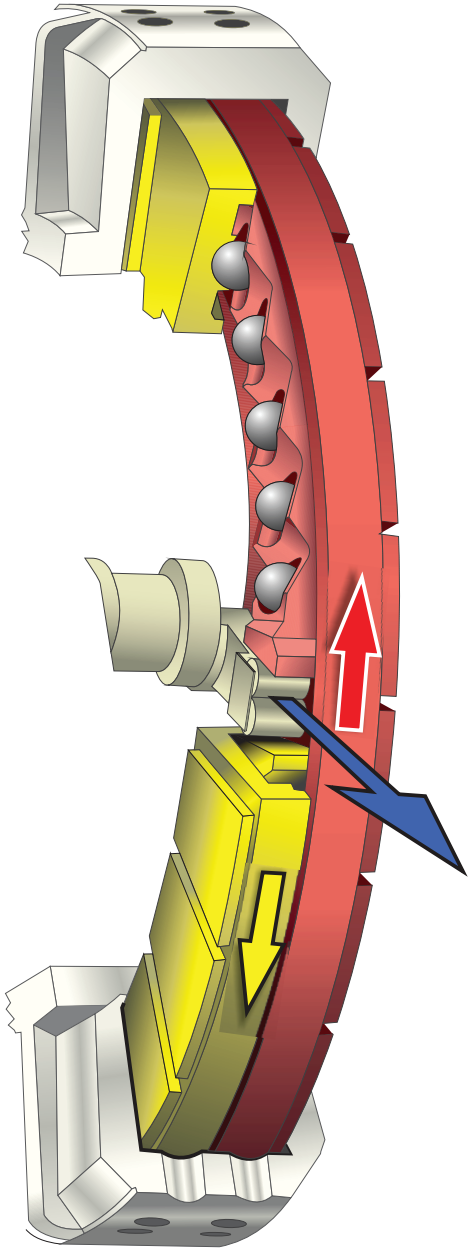

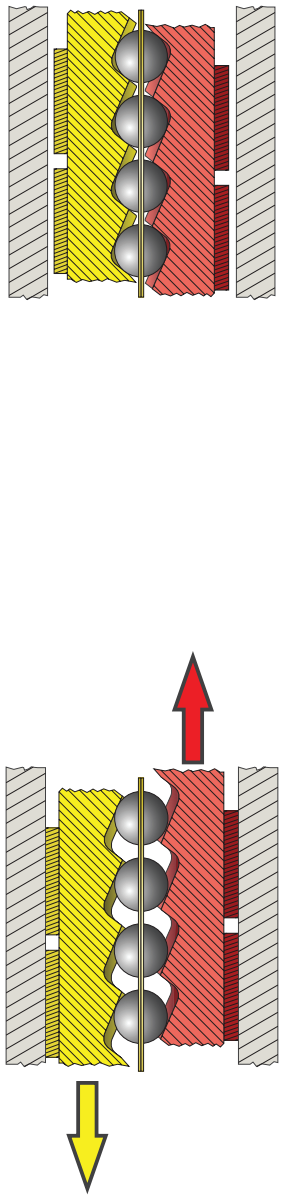

INTERNAL COMPONENTS OF THE PRIMARY BRAKING HOUSING

| | |
|---|---|
| DATE: | 15 SEP 2014 |
| DRAWN BY: | B BALKWILL |
| REVIEWED: | |
| SIGNOFF: | 28 SEP 2014 |

| REV: | REVIEWED: | | DATE: |
|---|---|---|---|
| 1 | B BALKWILL | 15 SEP | 2014 |
| 2 | L. LLOYD | 28 SEP | 2014 |
| | | | |
| | | | |
| | | | |

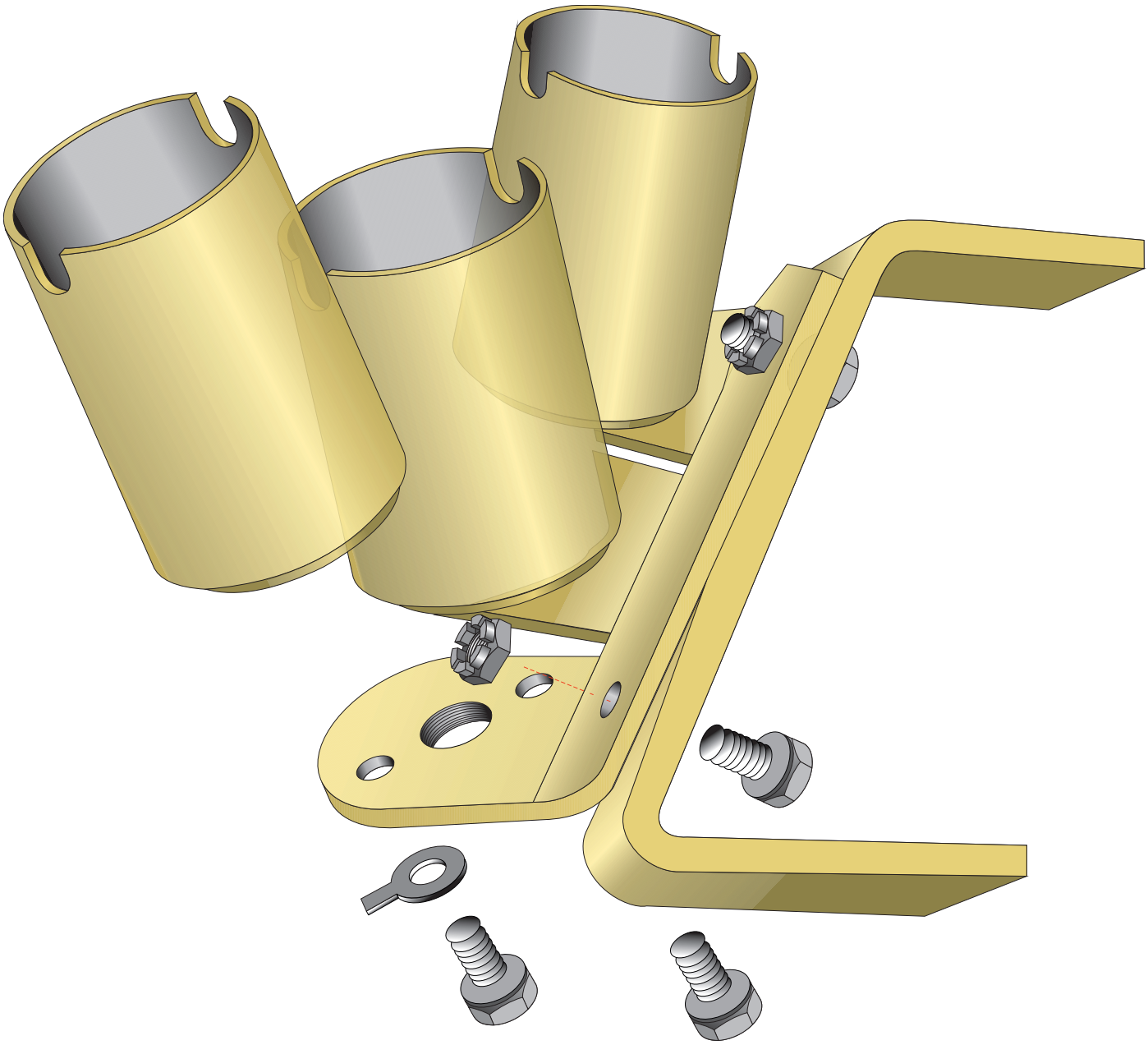

SMOKE DISCHARGERS
RHS TURRET

| | |
|---|---|
| DATE: | 09 FEB 2009. |
| DRAWN BY: | B. BALKWILL |
| REVIEWED: | |
| SIGNOFF: | 15 AUG 2015 |

| REV: | REVIEWED: | | DATE: |
|---|---|---|---|
| 1 | T VOGEL | | MAY 2009 |
| 2 | L LLOYD | | NOV 2008 |
| 2A | B BALKWILL | | OCT 2010 |
| 2B | B BALKWILL | | OCT. 2010 |
| 3 | B BALKWILL | | SEP. 2014 |
| 4 | B BALKWILL | | AUG 2015 |

| | |
|---|---|
| DATE: | 13 OCT 2008 |
| DRAWN BY: | B.BALKWILL |
| REVIEWED: | |
| SIGNOFF: | 15 AUG 2015 |

| REV: | REVIEWED: | DATE: |
|---|---|---|
| 1 | B BALKWILL | OCT 2014 |
| 2 | L.LLOYD | OCT 2014 |
| 3 | B BALKWILL | AUG 2015 |
| | | |
| | | |

SMOKE PROJECTORS
RHS TURRET

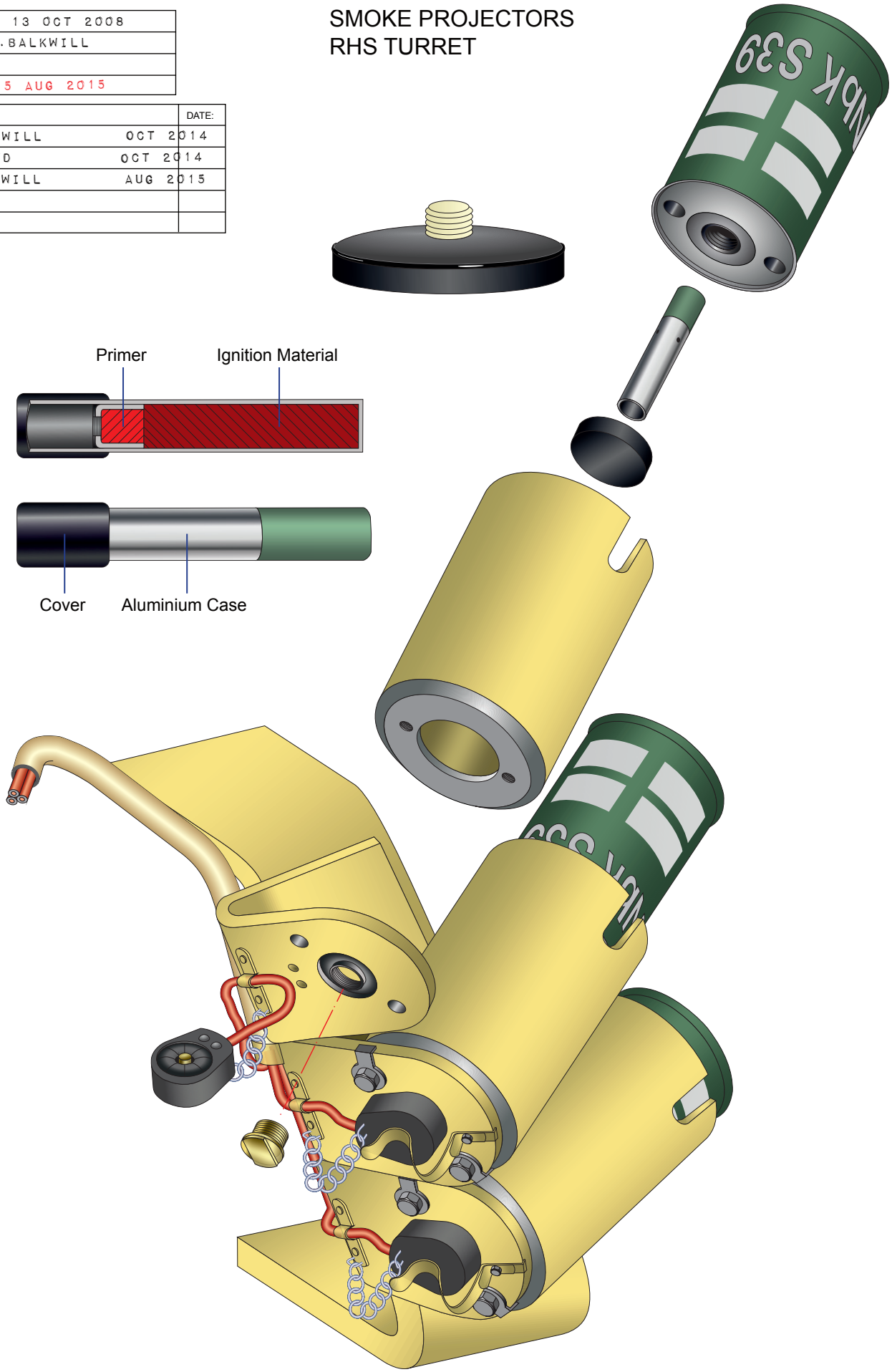

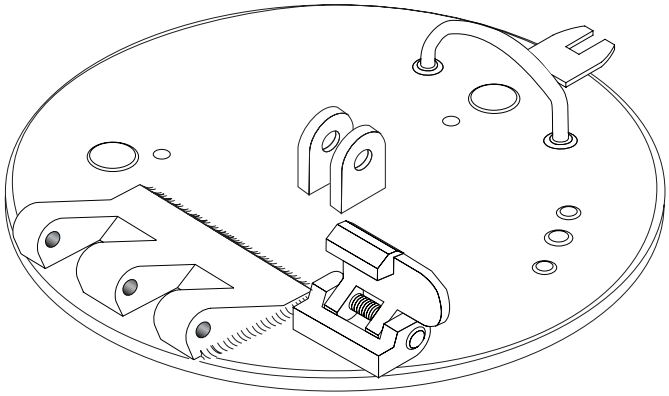

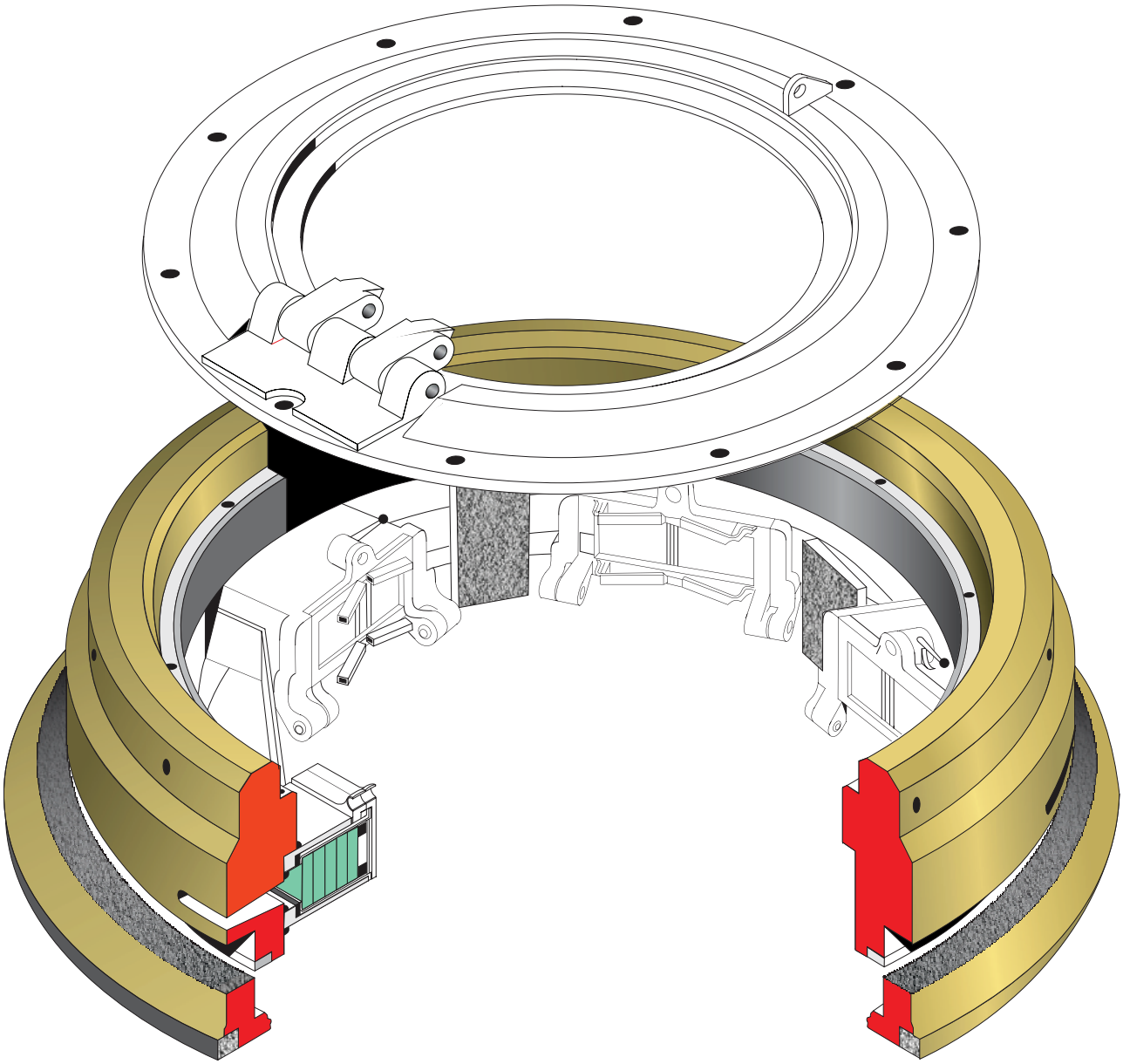

TANK COMMANDER
CUPOLA

| | |
|---|---|
| DATE: | 09 FEB 2008 |
| DRAWN BY: | B.BALKWILL |
| REVIEWED: | |
| SIGNOFF: | 30 SEP 2014 |

| REV: | REVIEWED: | DATE: |
|---|---|---|
| 1 | T VOGEL | MAY 2009 |
| 2 | L.LLOYD | NOV 2008 |
| 3 | B BALKWILL | OCT 2010 |
| 3A | B BALKWILL | OCT 2010 |
| 4 | B BALKWILL | SEP 2014 |

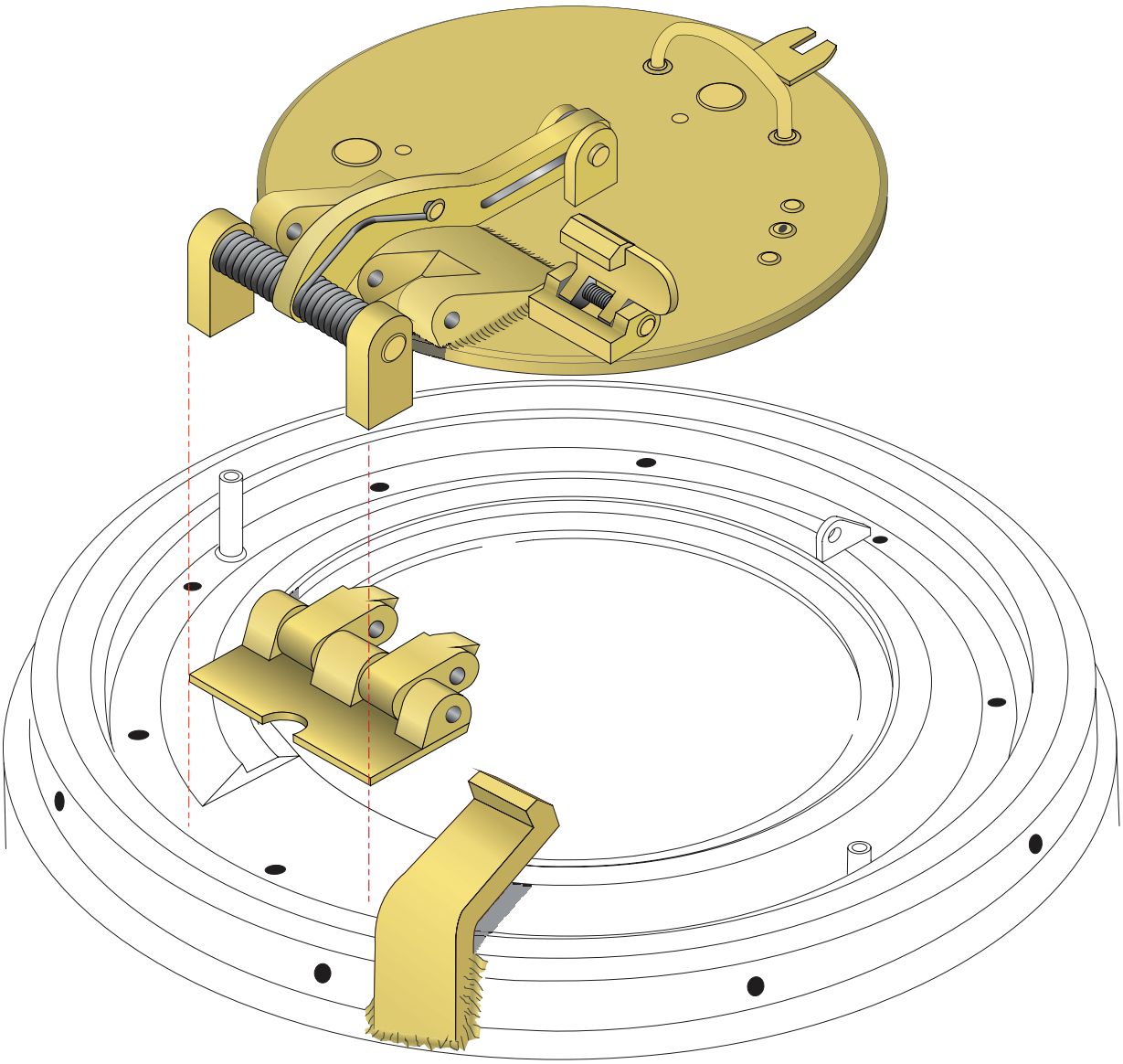

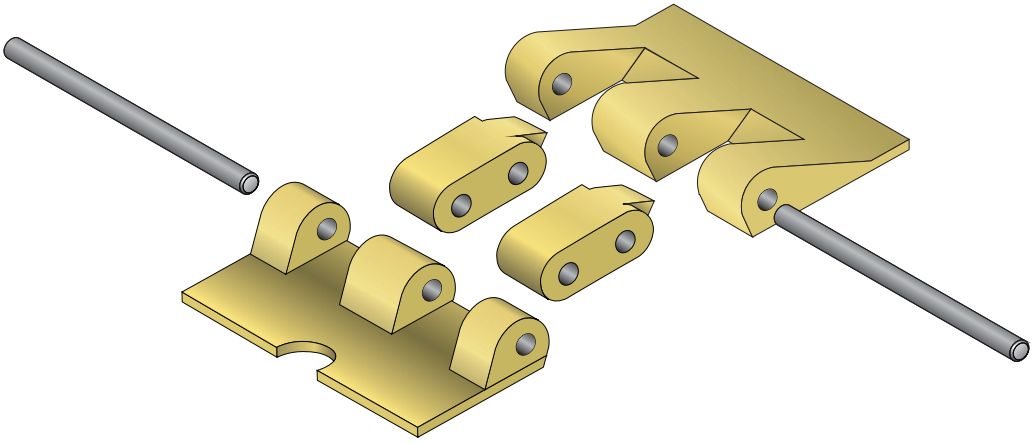

TANK COMMANDER
CUPOLA HATCH

| | |
|---|---|
| DATE: | 09 FEB 2008 |
| DRAWN BY: | BR. BALKWILL |
| REVIEWED: | |
| SIGNOFF: | 28 SEP 2014 |

| REV: | REVIEWED: | DATE: |
|---|---|---|
| 1 | T. VOGEL | NOV 2008 |
| 2 | B BALKWILL | OCT 2010 |
| 2A | B BALKWILL | OCT 2010 |
| 3 | B BALKWILL | SEP 2014 |
| | | |

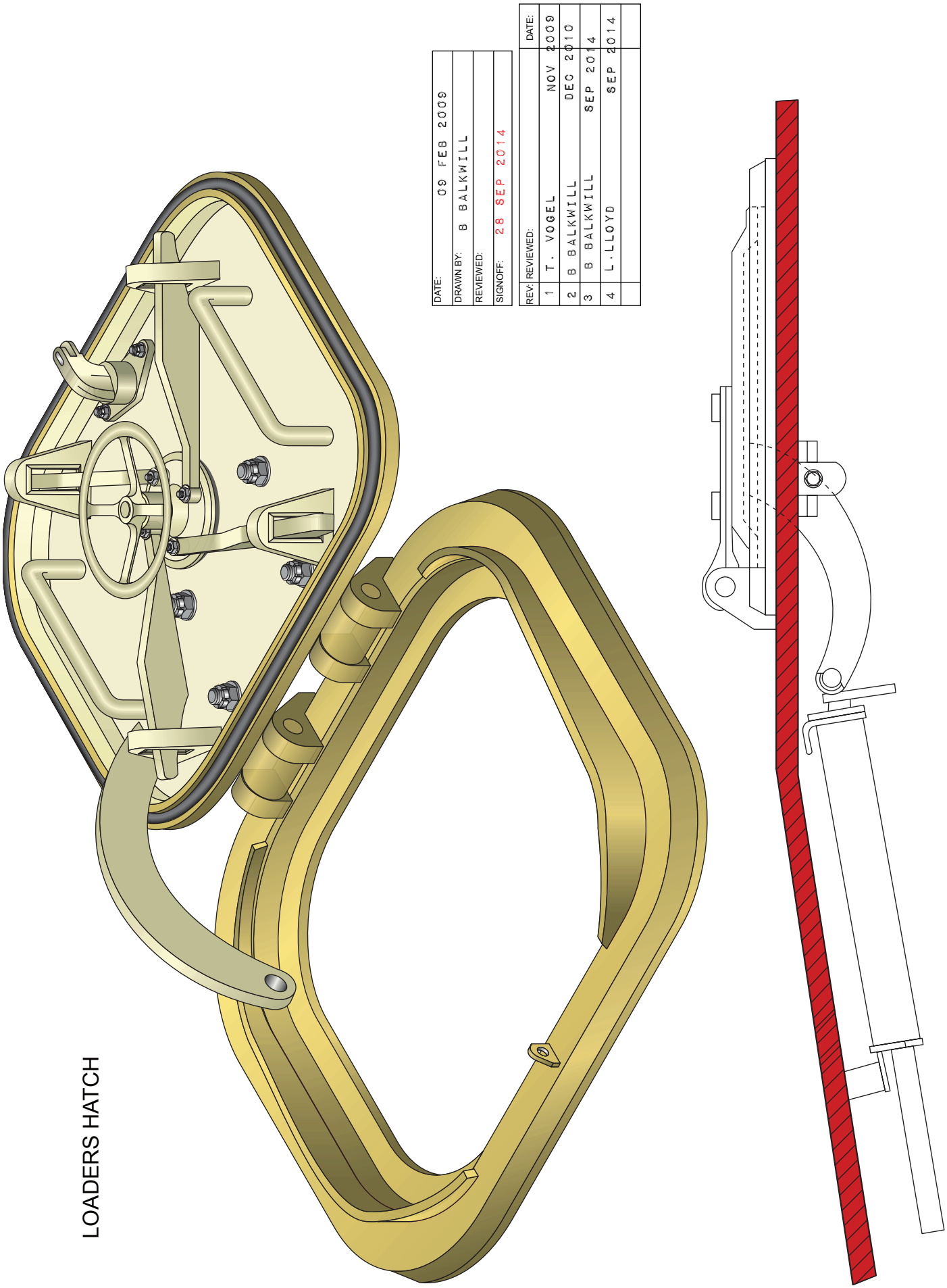
LOADERS HATCH
DATE: 09 FEB 2009
DRAWN BY: B BALKWILL
REVIEWED:
SIGNOFF: 28 SEP 2014
REV: REVIEWED: DATE:
1 T. VOGEL NOV 2009
2 B BALKWILL DEC 2010
3 B BALKWILL SEP 2014
4 L.LLOYD SEP 2014

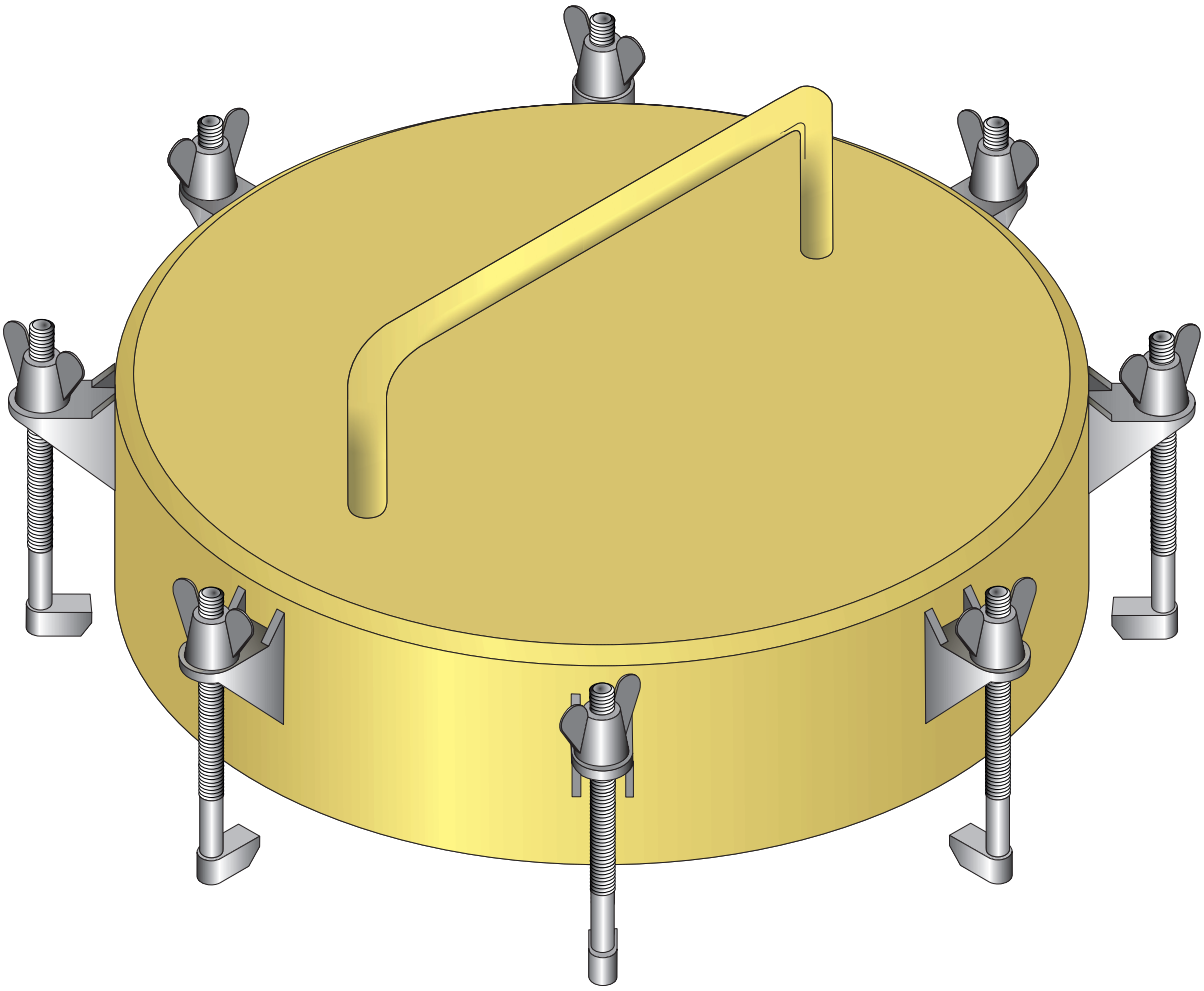

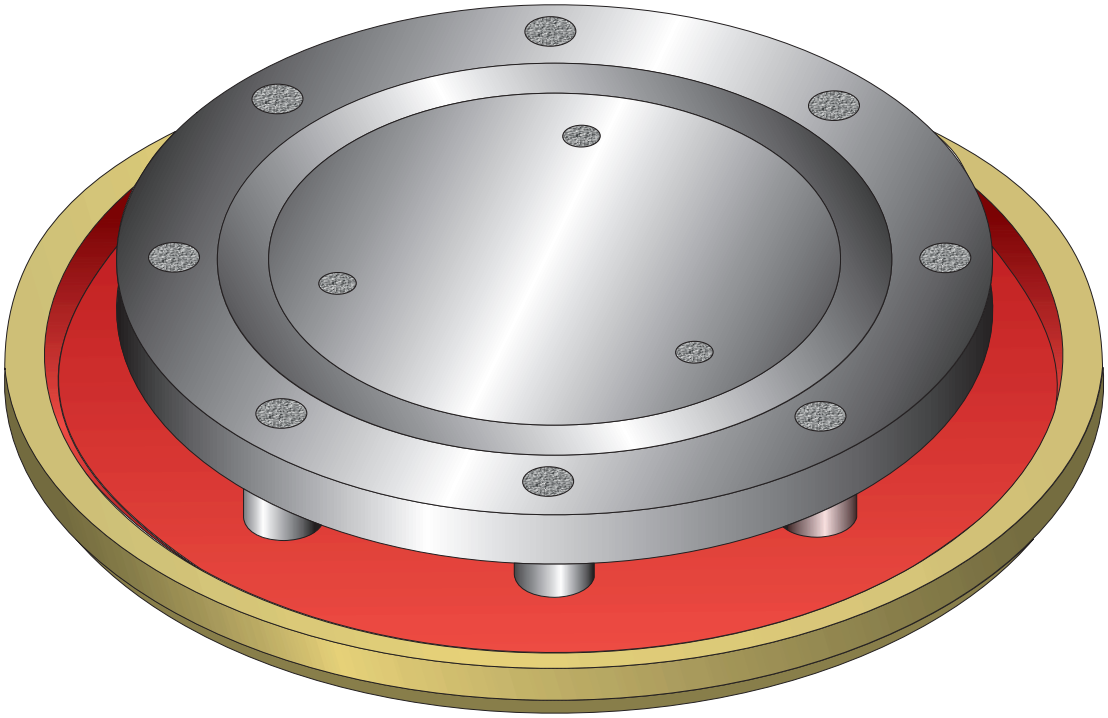

TURRET ROOF
VENTILATION COVER

| | |
|---|---|
| DATE: | 09 FEB 2008 |
| DRAWN BY: | BR. BALKWILL |
| REVIEWED: | |
| SIGNOFF: | 15 AUG 2015 |

| REV: | REVIEWED: | DATE: |
|---|---|---|
| 1 | T VOGEL | MAY 2009 |
| 2 | B BALKWILL | DEC 2010 |
| | | |
| 3 | B. BALKWILL | DEC 2010 |
| 4 | B BALKWILL | AUG 2015 |

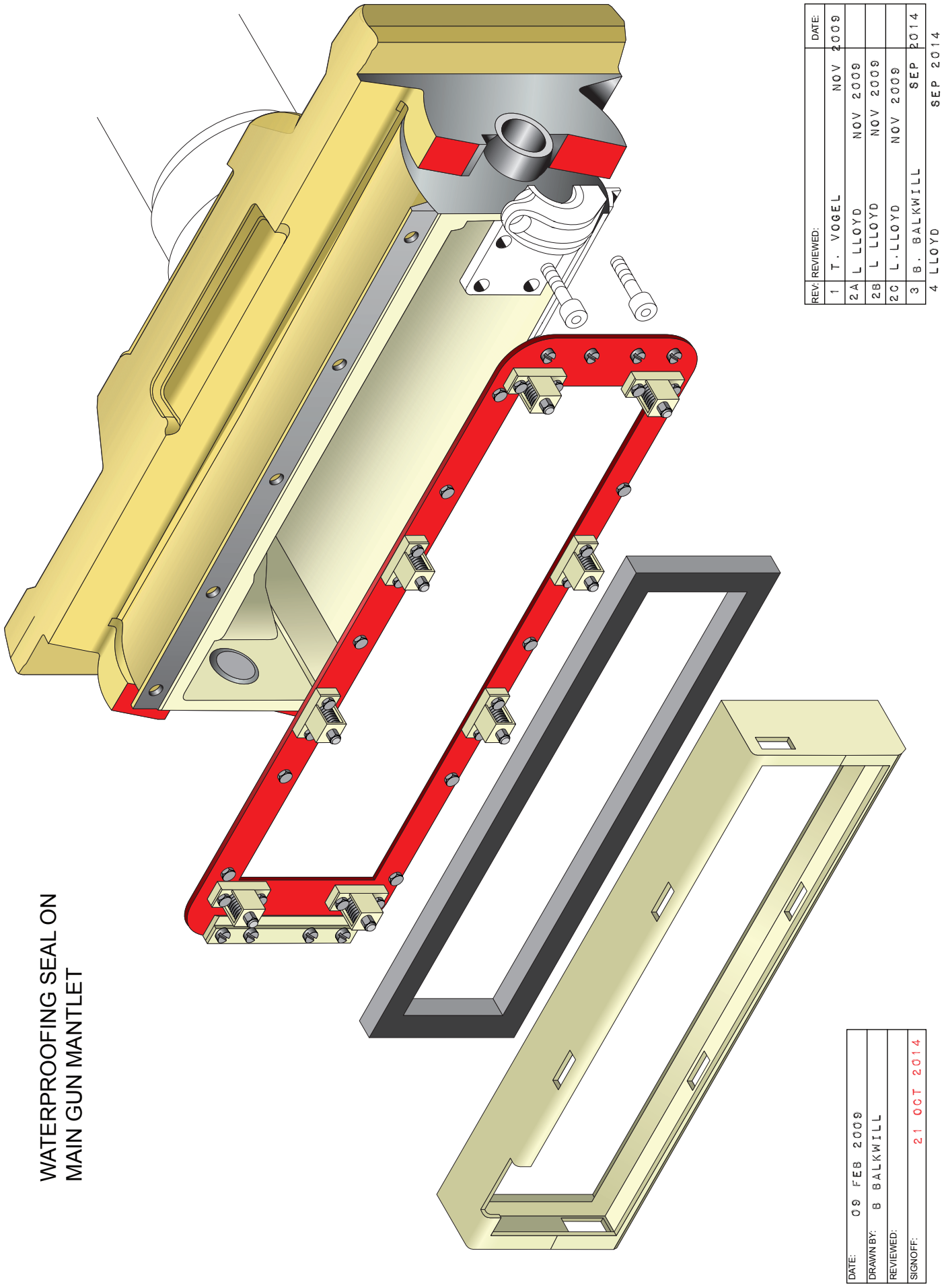
WATERPROOFING SEAL ON
MAIN GUN MANTLET
REV: REVIEWED: DATE:
1 T. VOGEL NOV 2009
2A L LLOYD NOV 2009
2B L LLOYD NOV 2009
2C L.LLOYD NOV 2009
3 B. BALKWILL SEP 2014
4 LLOYD SEP 2014
DATE: 09 FEB 2009
DRAWN BY: B BALKWILL
REVIEWED:
SIGNOFF: 21 OCT 2014

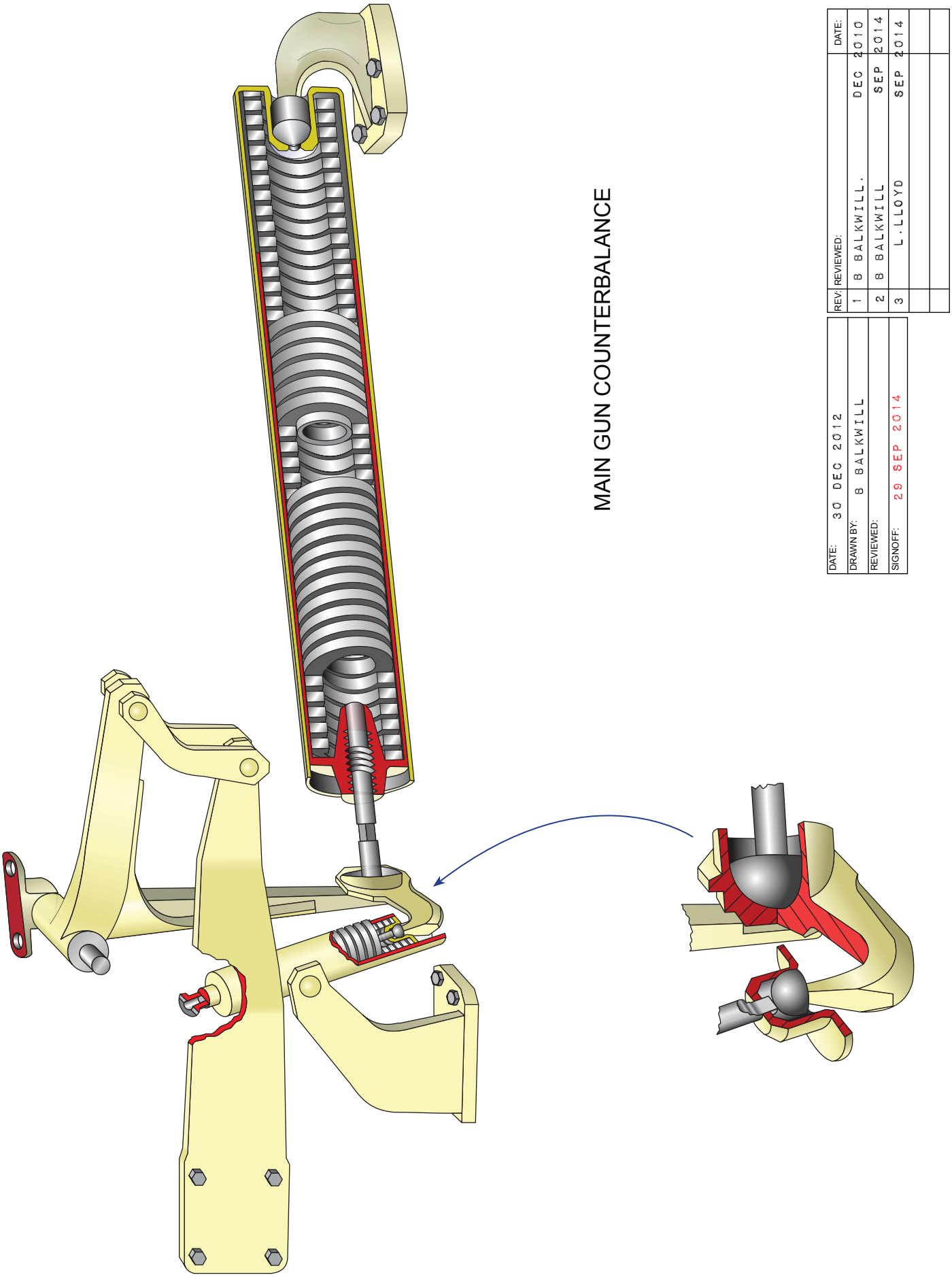
MAIN GUN COUNTERBALANCE
DATE: 30 DEC 2012
DRAWN BY: B BALKWILL
REVIEWED:
SIGNOFF: 29 SEP 2014
REV: REVIEWED: DATE:
1 B BALKWILL. DEC 2010
2 B BALKWILL SEP 2014
3 L.LLOYD SEP 2014

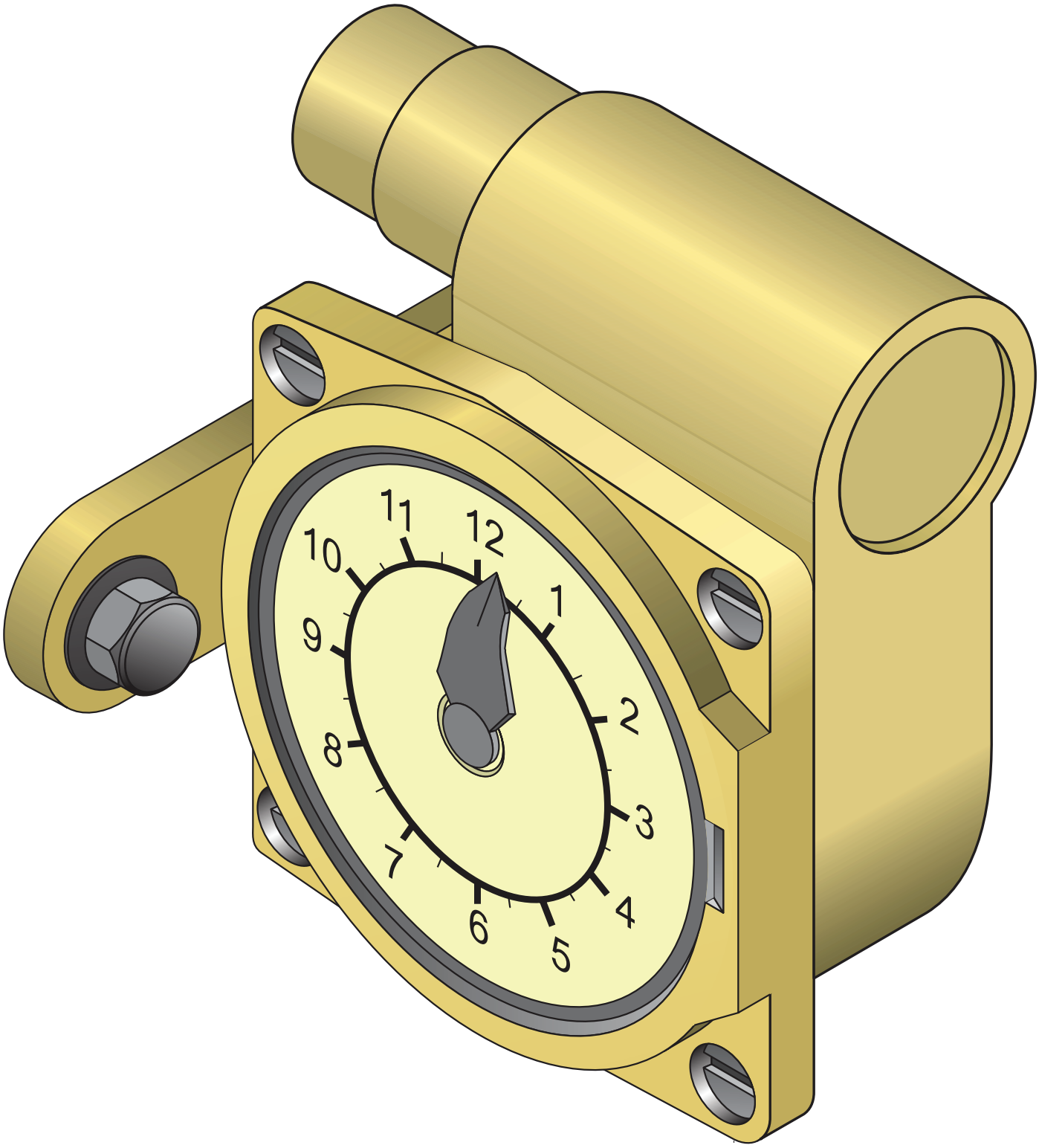


AZIMUTH
INDICATOR

| | |
|---|---|
| DATE: | 30 DEC 2012 |
| DRAWN BY: | B BALKWILL |
| REVIEWED: | |
| SIGNOFF: | 29 SEP 2014 |

| REV: | REVIEWED: | DATE: |
|---|---|---|
| 1 | B BALKWILL | DEC 2010 |
| 2 | B. BALKWILL | SEP 2014 |
| | | |
| | | |
| | | |

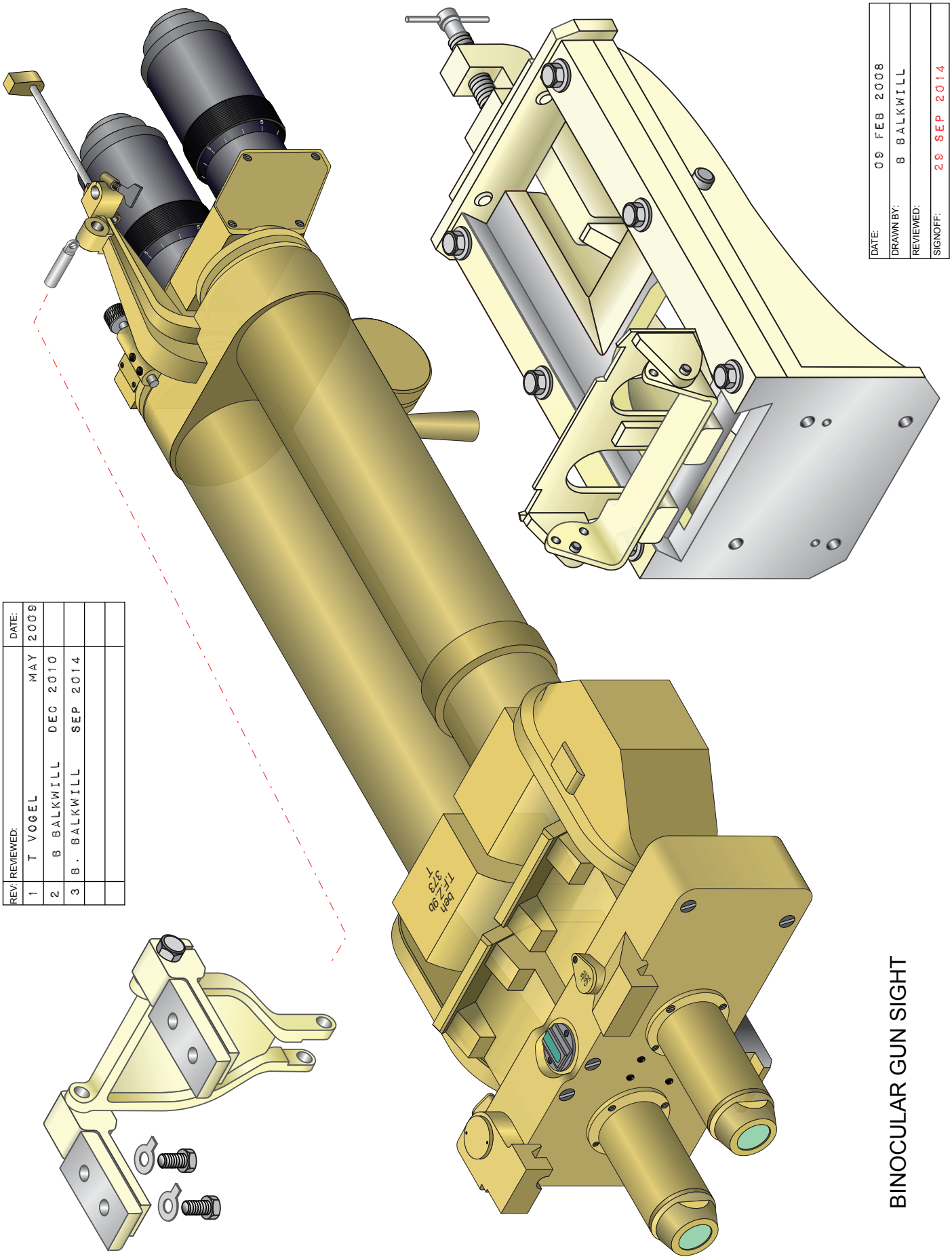
REV: REVIEWED: DATE:
1 T VOGEL MAY 2009
2 B BALKWILL DEC 2010
3 B. BALKWILL SEP 2014
DATE: 09 FEB 2008
DRAWN BY: B BALKWILL
REVIEWED:
SIGNOFF: 29 SEP 2014
BINOCULAR GUN SIGHT

| | |
|---|---|
| DATE: | 09 SEP 2014 |
| DRAWN BY: | B BALKWILL |
| REVIEWED: | |
| SIGNOFF: | 16 AUG 2015 |

| REV: | REVIEWED: | DATE: |
|---|---|---|
| 1 | B.BALKWILL | SEP 2014 |
| 2 | L. LLOYD | OCT 2014 |
| 3 | L LLOYD | AUG 2015 |
| | | |
| | | |

© **The Tank Museum**, Bovington, UK.

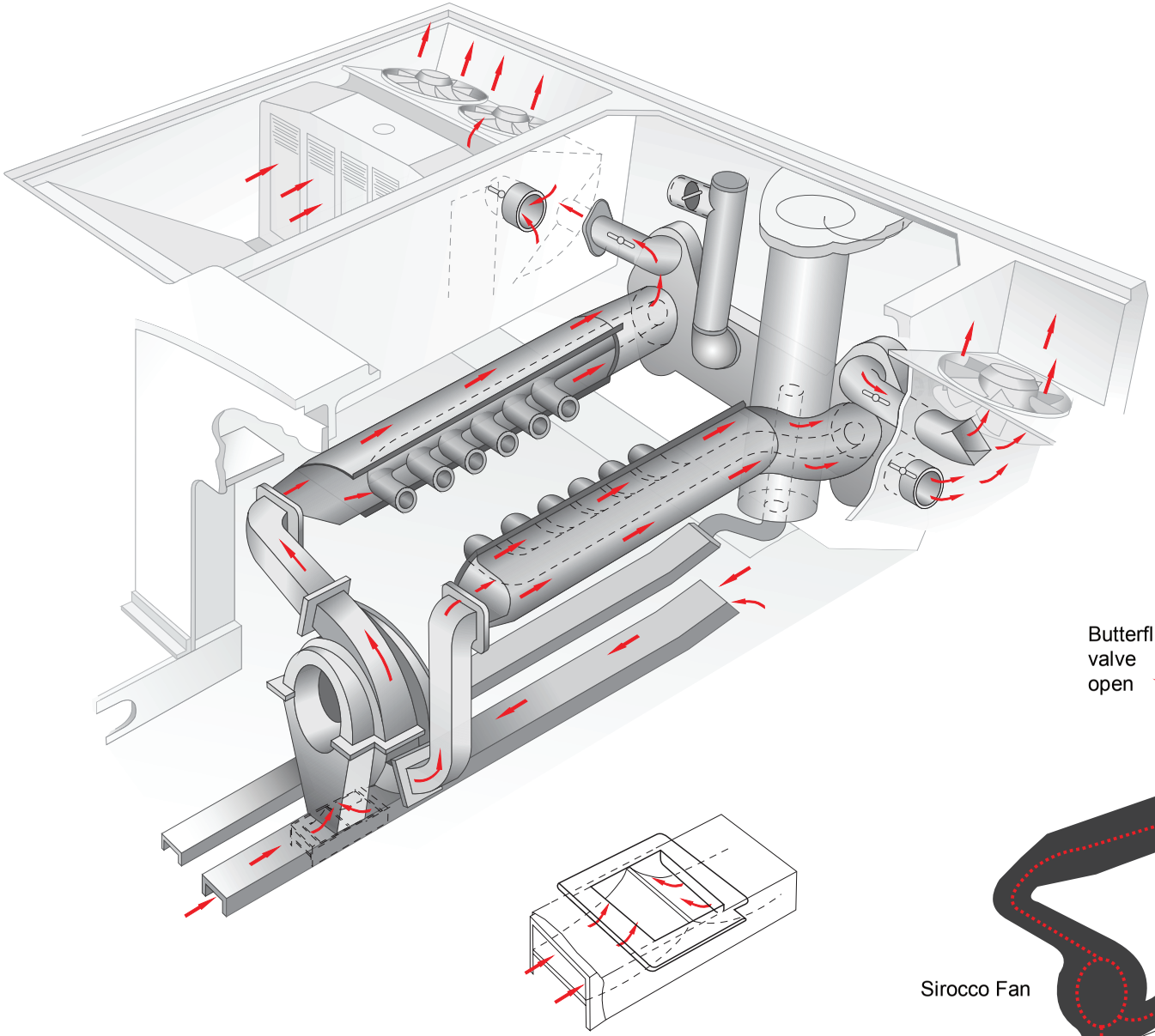

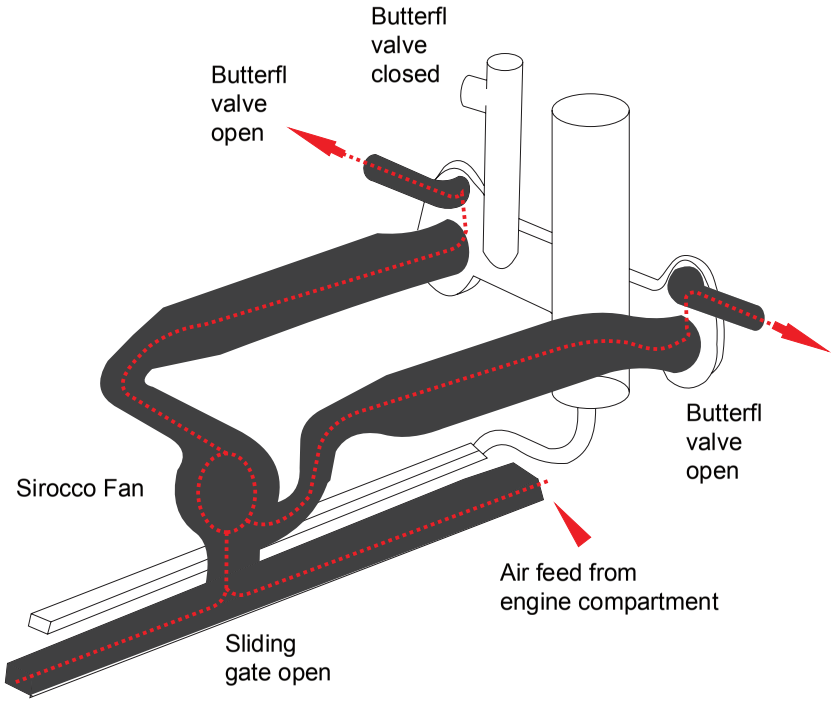


MAYBACH HL 210 P 45
AIRFLOW - OPERATION NORMAL

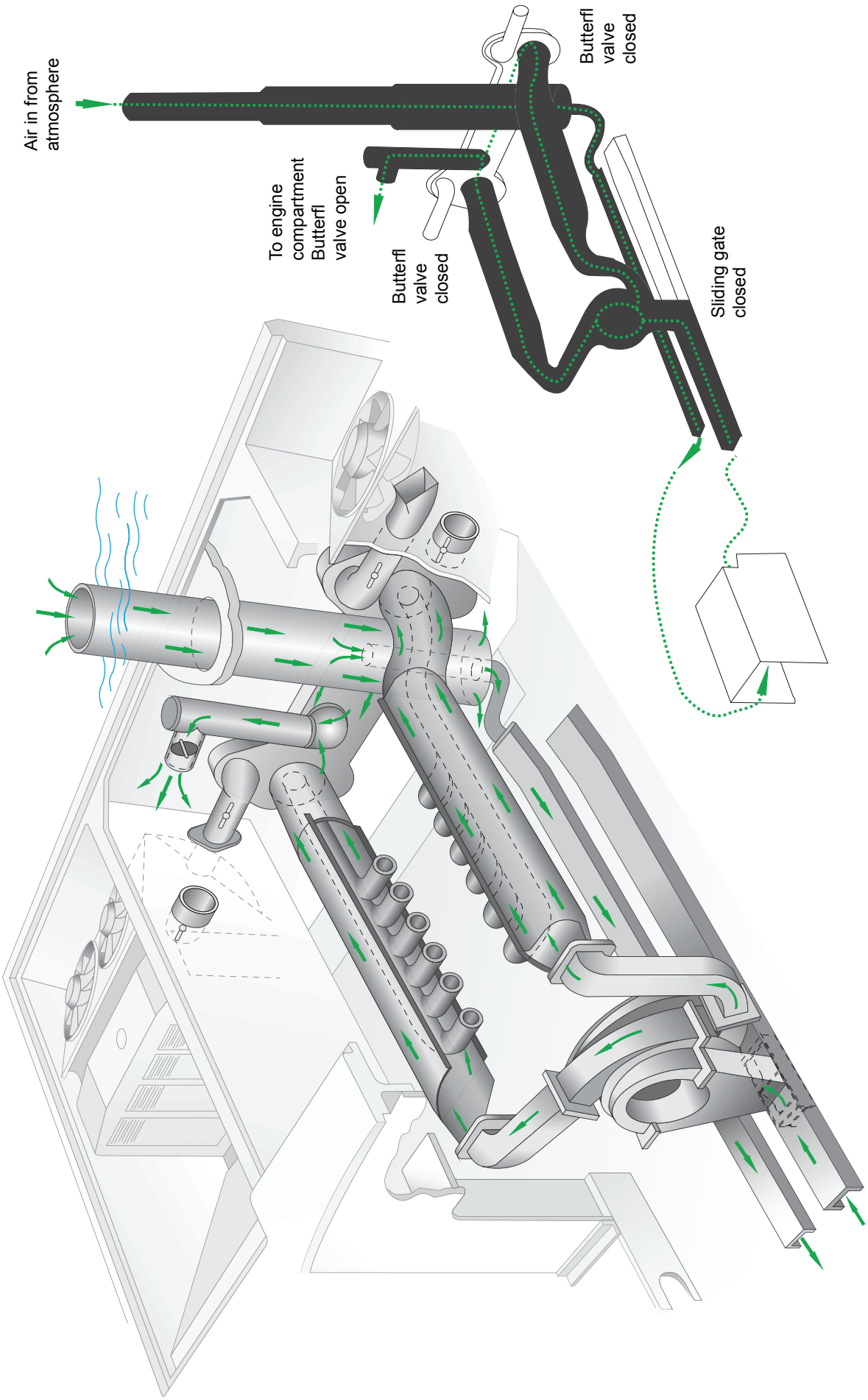


| DATE: | 09 SEP 2014 |
|---|---|
| DRAWN BY: | B BALKWILL |
| REVIEWED: | |
| SIGNOFF: | 16 AUG 2015 |

| REV: | REVIEWED: | DATE: |
|---|---|---|
| 1 | B.BALKWILL | SEP 2014 |
| 2 | L. LLOYD | OCT 2014 |
| 3 | L LLOYD | AUG 2015 |

© **The Tank Museum**, Bovington, UK.

MAYBACH HL 210 P 45
AIRFLOW - SUBMERGED OPERATION

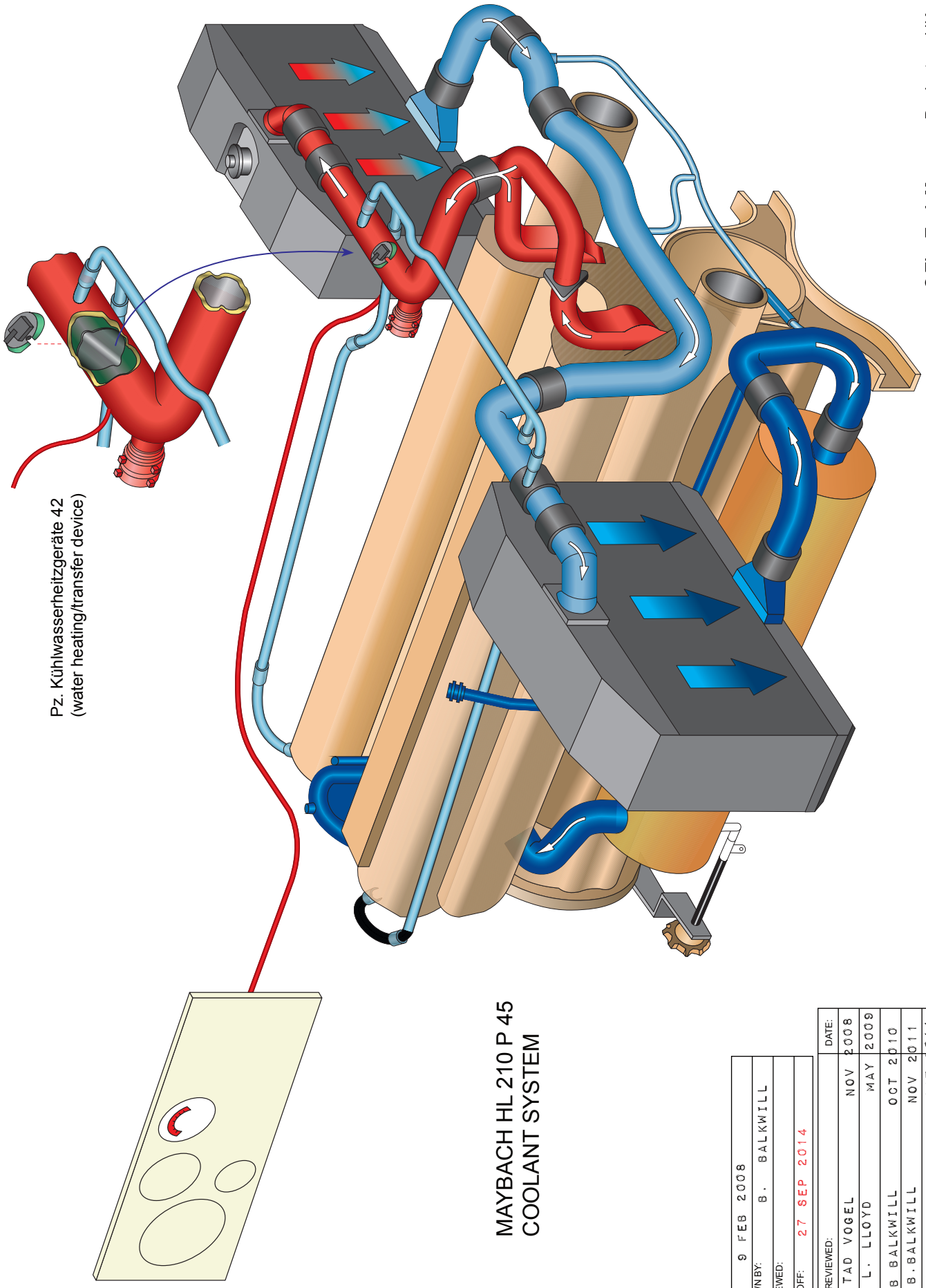


© **The Tank Museum**, Bovington, UK.

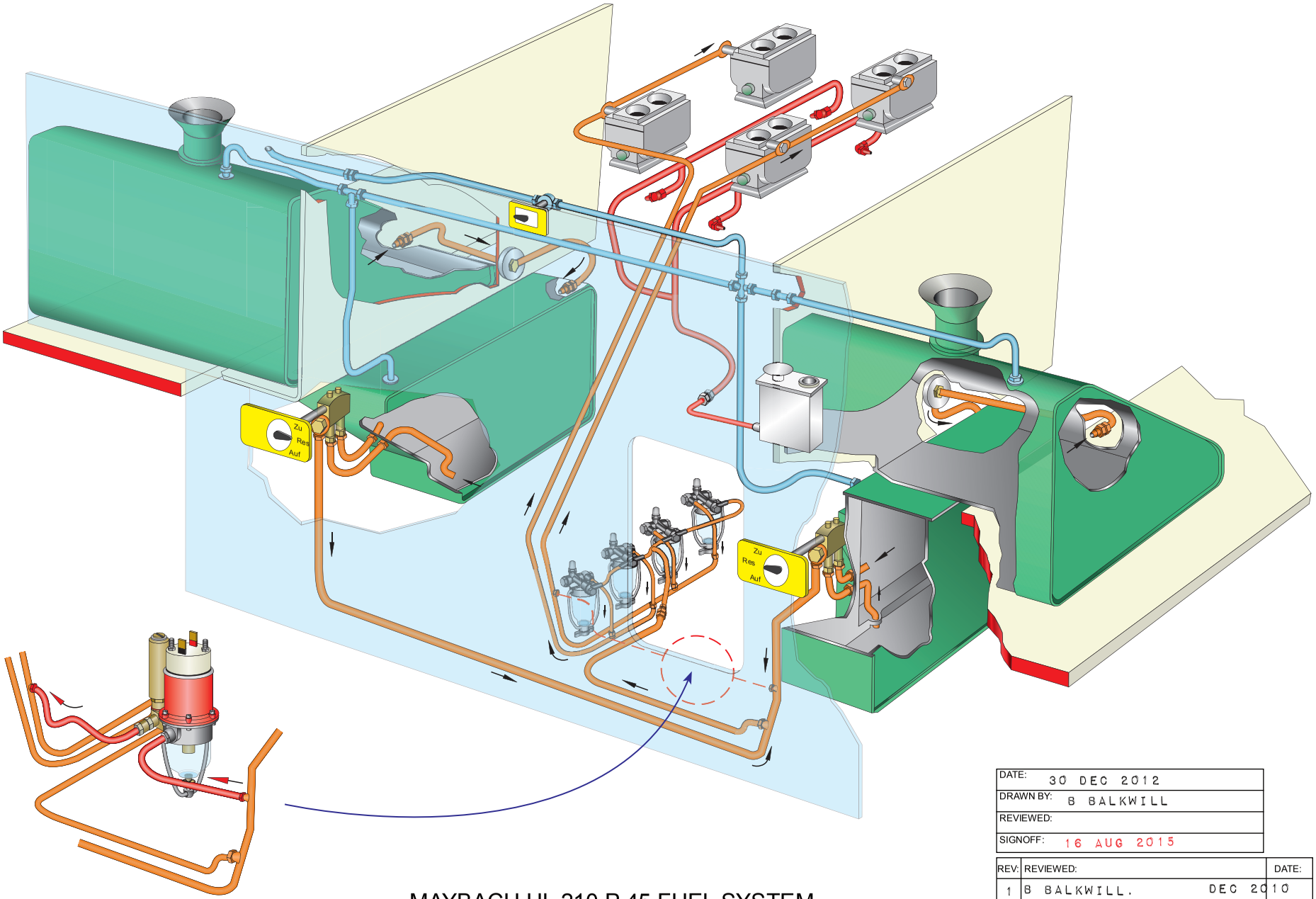


| | |
|---|---|
| DATE: | 30 DEC 2012 |
| DRAWN BY: | B BALKWILL |
| REVIEWED: | |
| SIGNOFF: | 16 AUG 2015 |

| REV: | REVIEWED: | DATE: |
|---|---|---|
| 1 | B BALKWILL. | DEC 2010 |
| 2 | B BALKWILL | SEP 2014 |
| 3 | L.LLOYD | SEP 2014 |
| 4 | LLLOYD | OCT 2014 |
| 5 | B. BALKWILL | AUG 2015 |

MAYBACH HL 210 P 45 FUEL SYSTEM

© **The Tank Museum**, Bovington, UK.

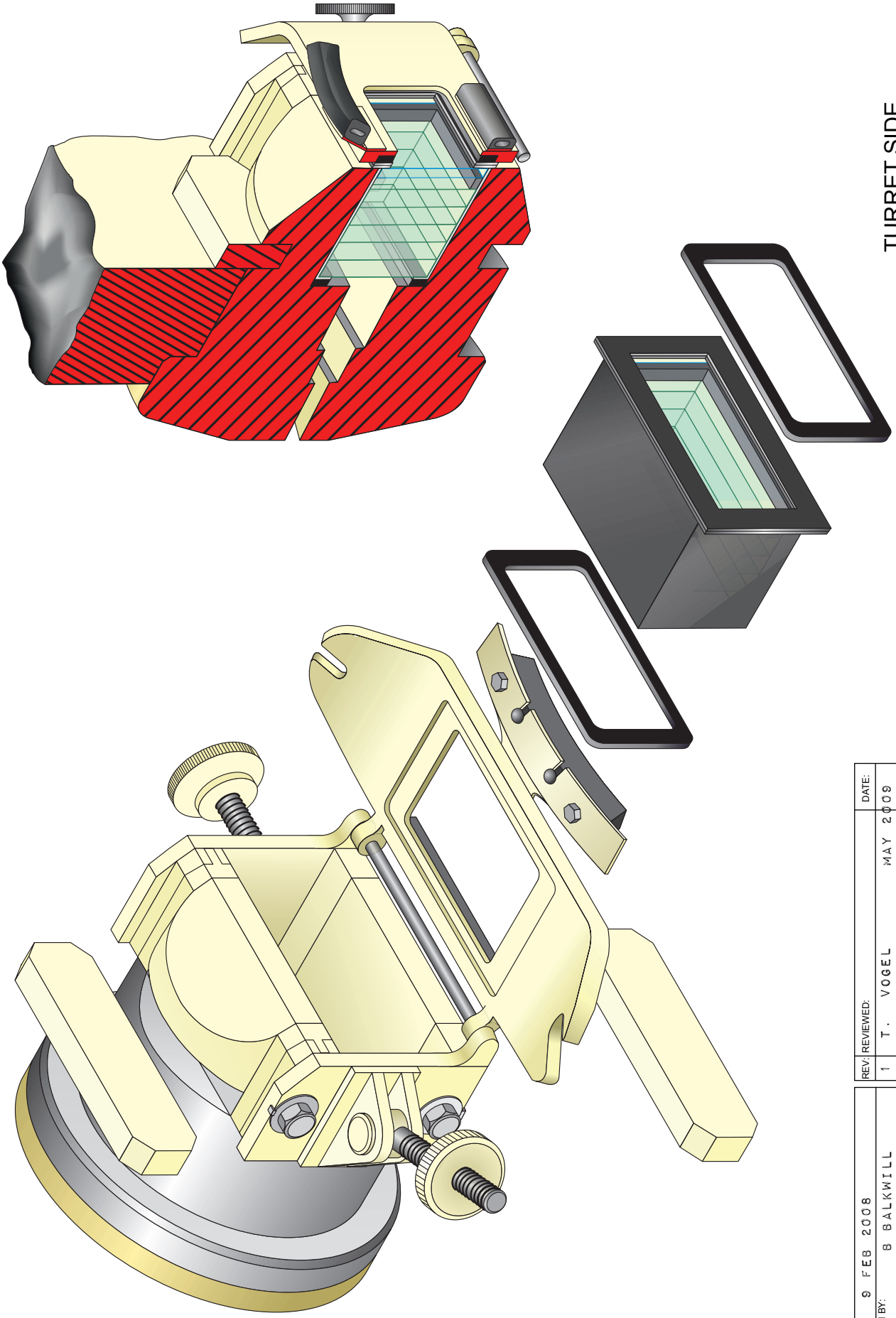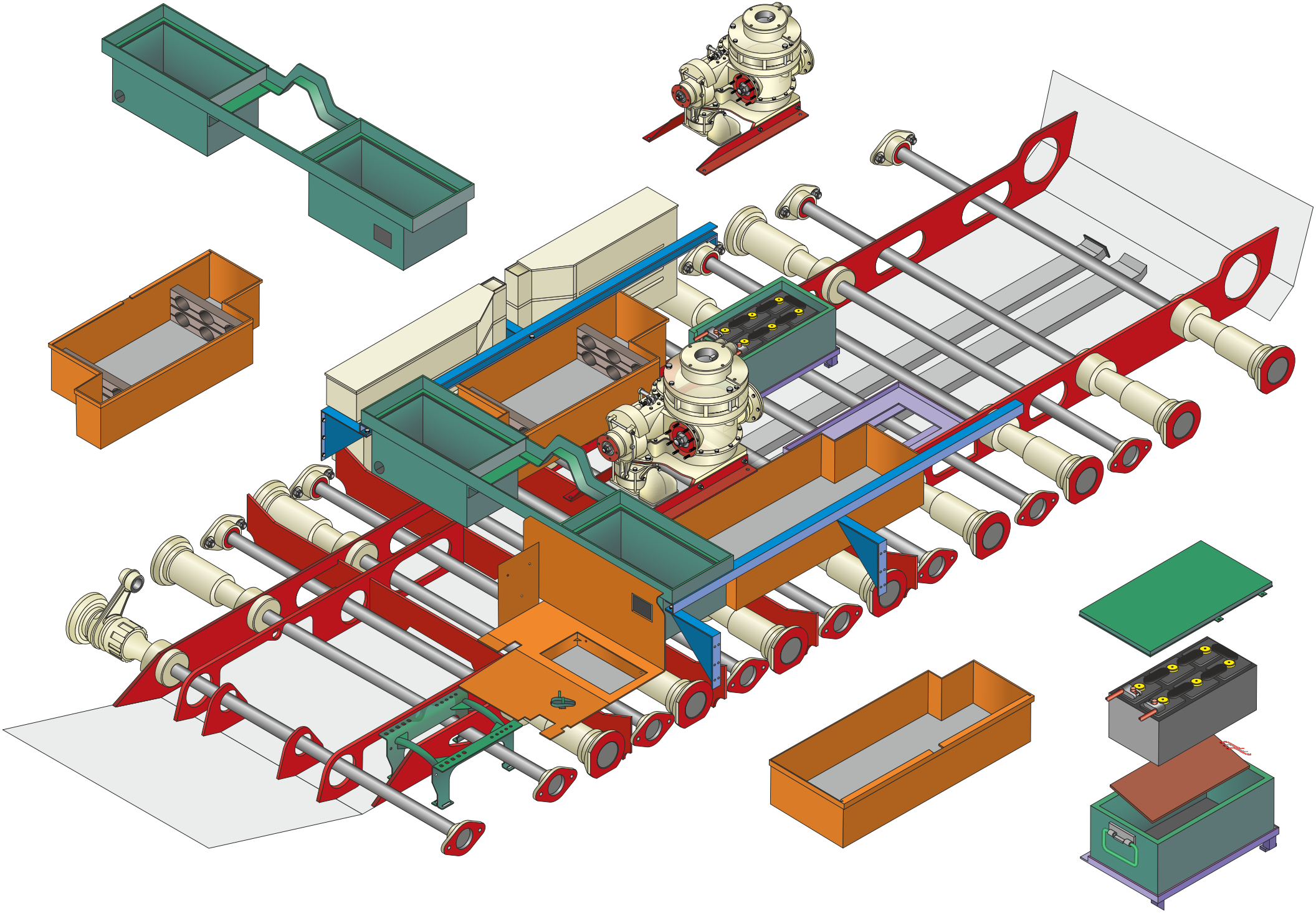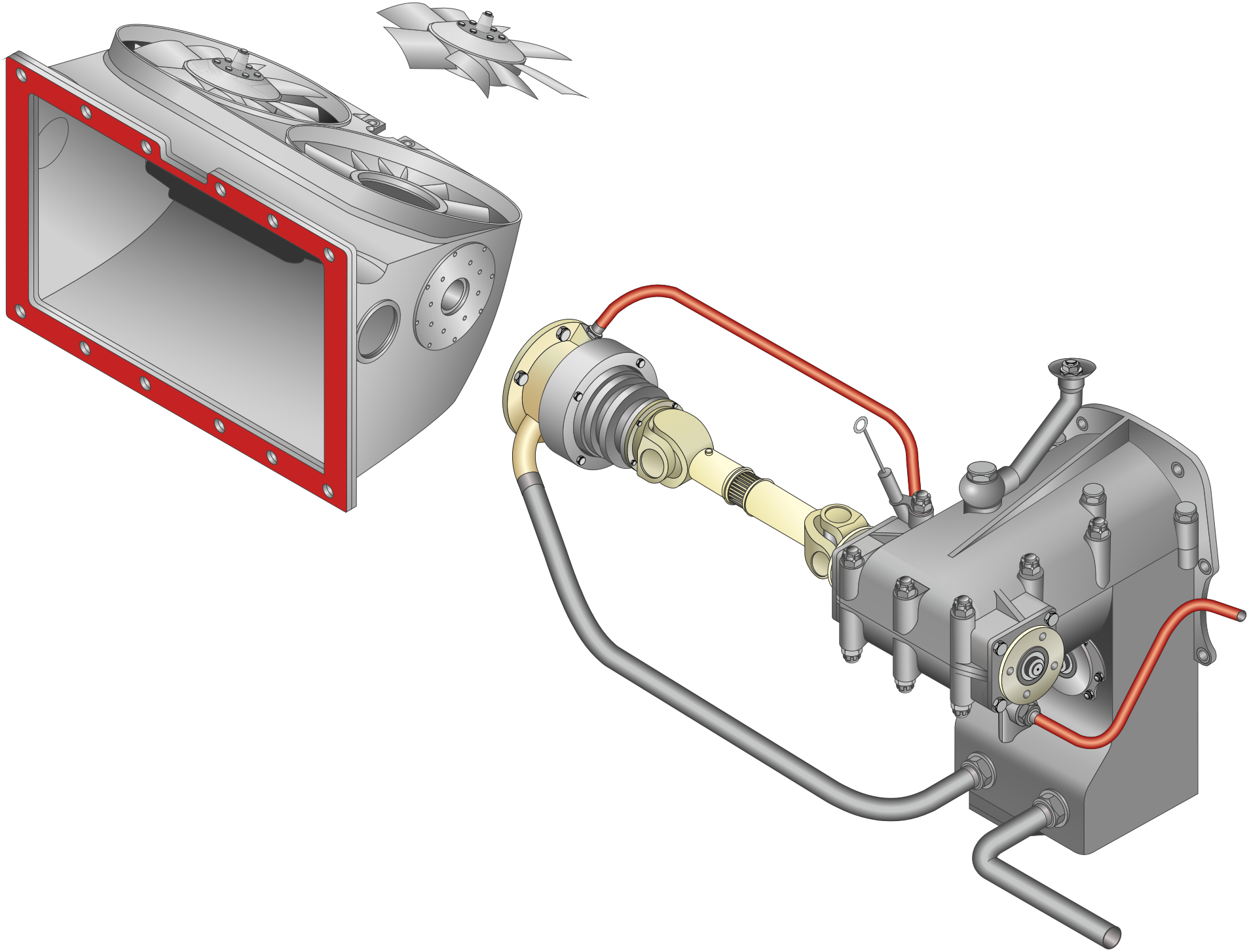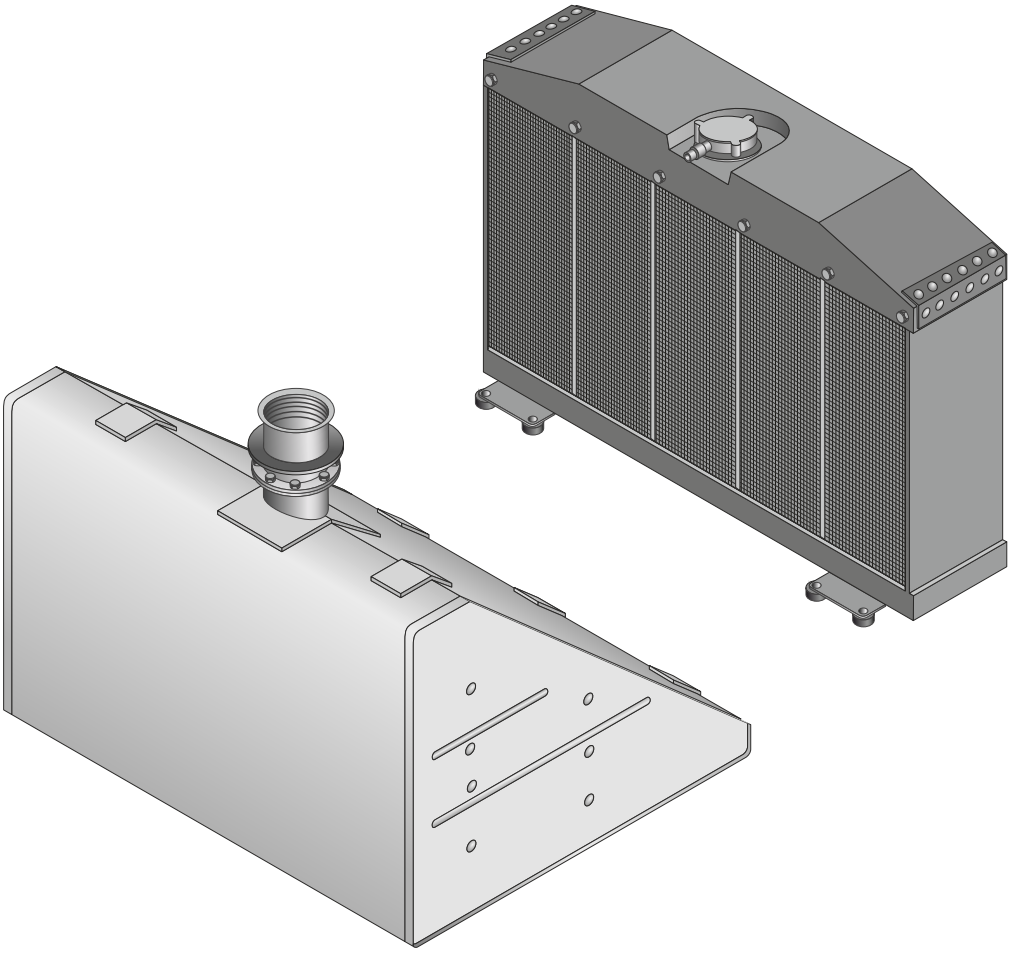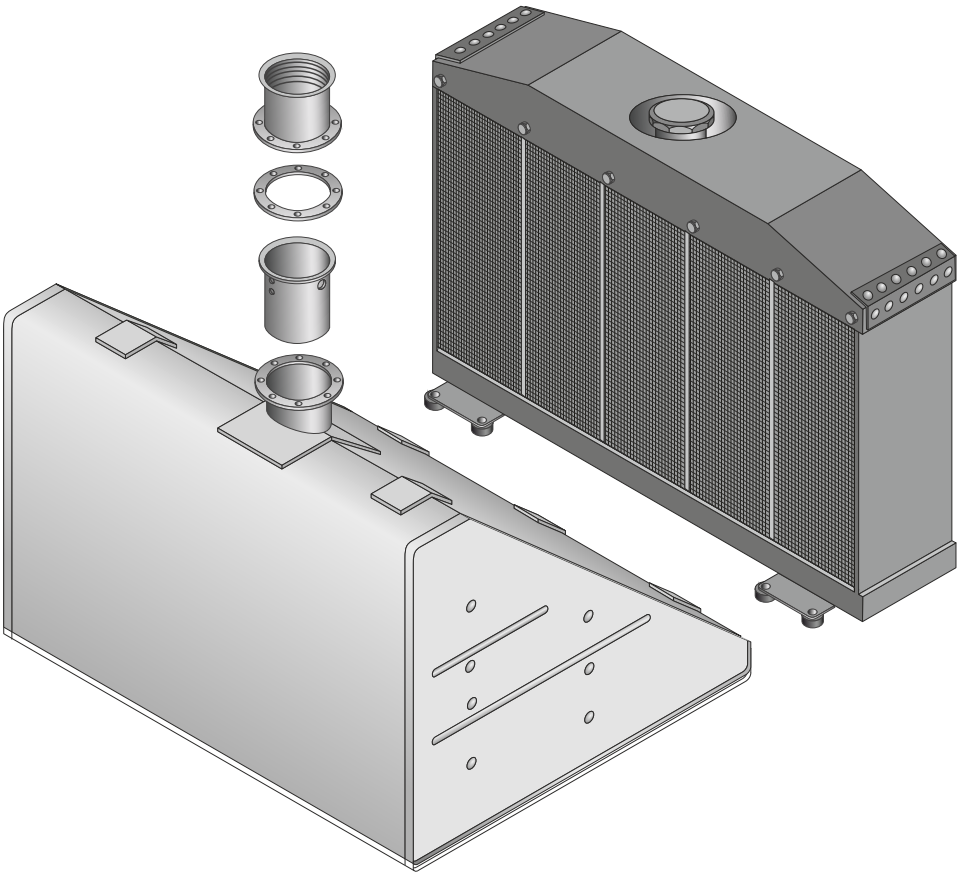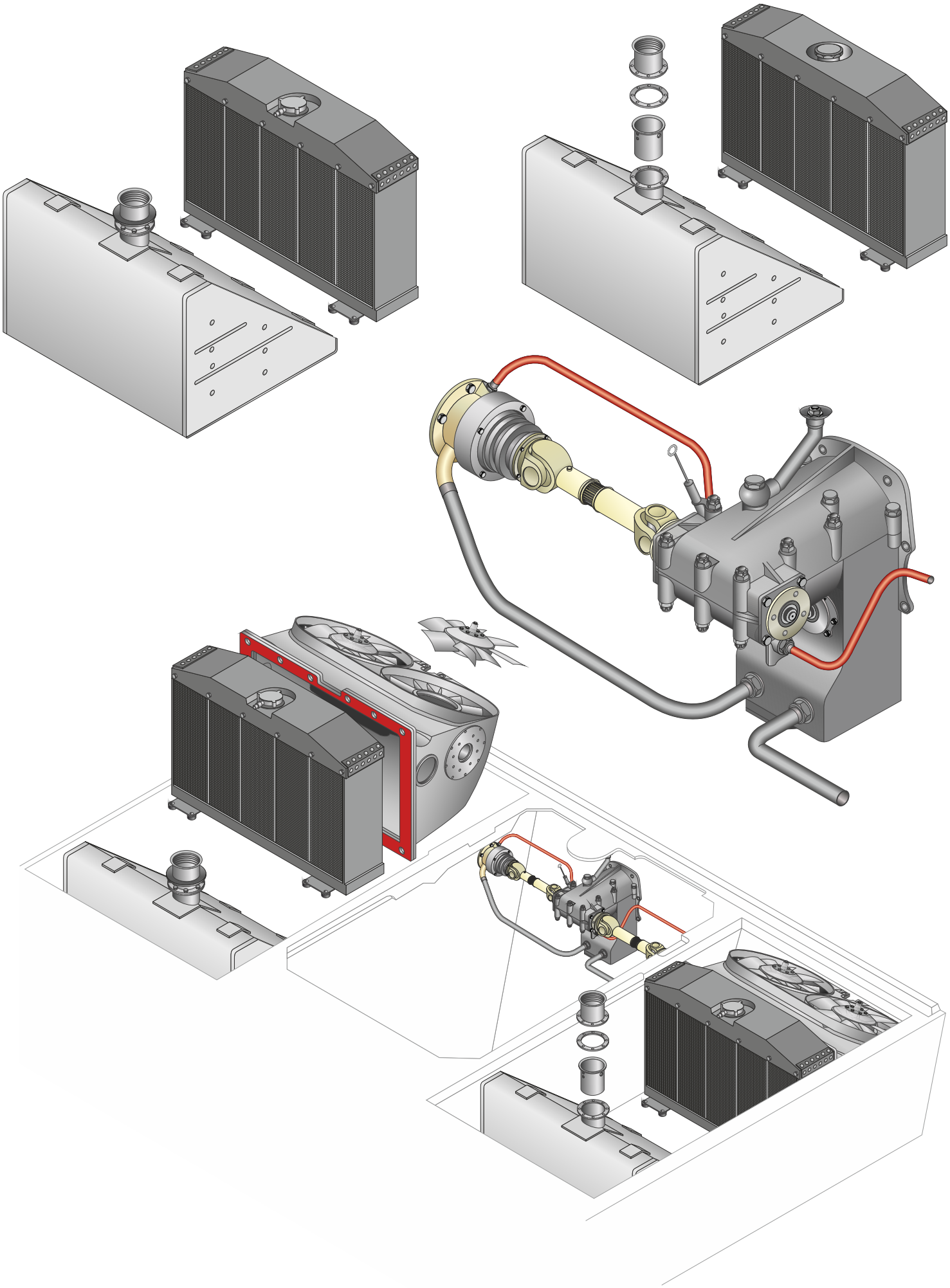
TURRET SIDE
VISION PORT
DATE: 9 FEB 2008
DRAWN BY: B BALKWILL
REVIEWED:
SIGNOFF: 29 SEP 2014
REV: REVIEWED: DATE:
1 T. VOGEL MAY 2009
2 B. BALKWILL JAN 2011
3 B. BALKWILL JAN 2011
4 B BALKWILL SEP 2014